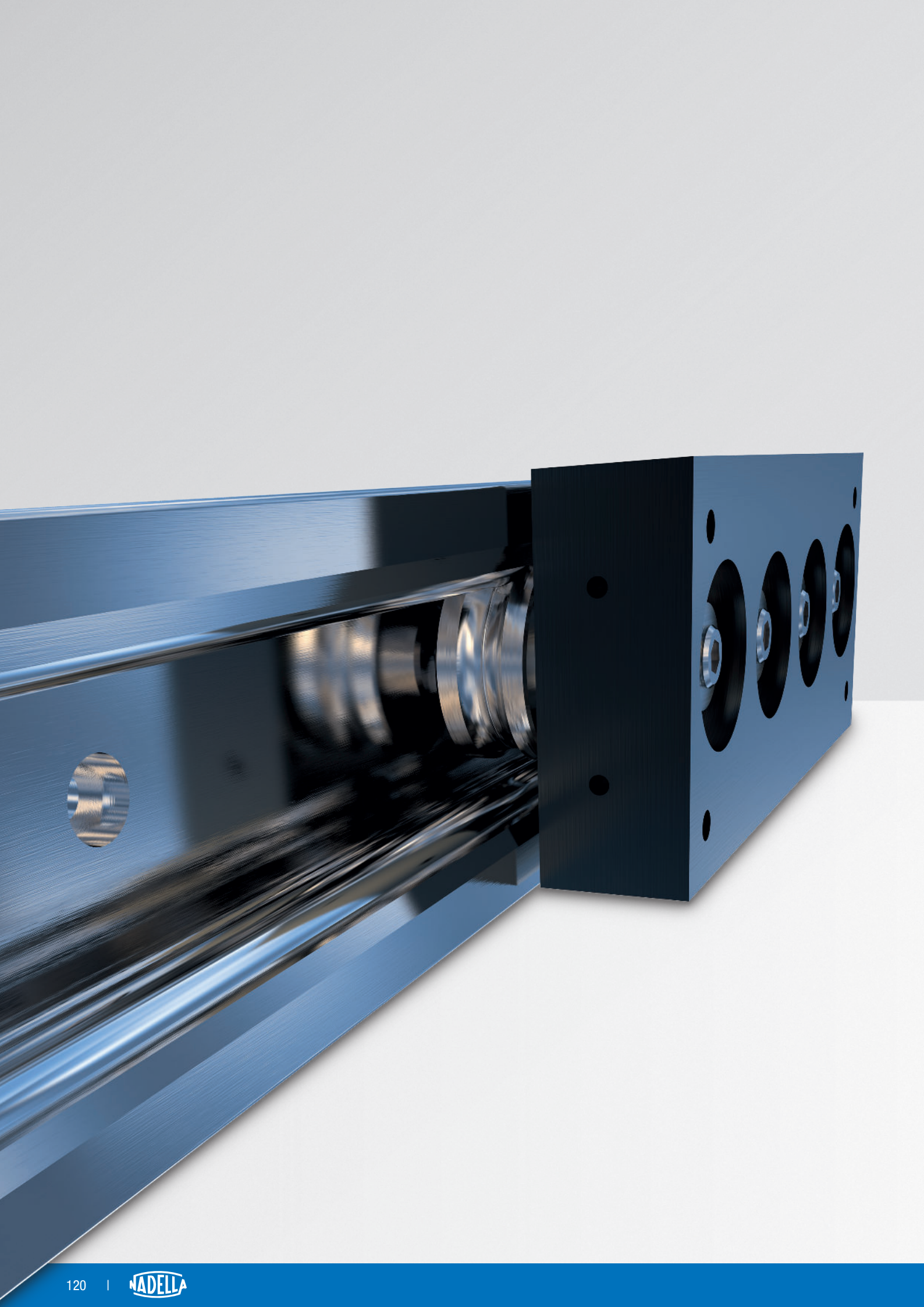

U-LINE

9

PAGE 122 — **9.1 PRODUCT DESCRIPTION**
- LM system
- Auto-aligning system
- LML system

PAGE 126 — **9.2 LM SYSTEM**
For light-medium loads
- Guide rails LM
- Guide rollers RCL, RCP, PFV
- Guide rollers RAL
- Guide wheels GLA
- Carriage C3 RCL, C3 RAL, C3 RYL
- Carriage C4 RCL, C4 RAL, C4 RYL
- Carriage T4 RCL, T4 RCP, T4 PFV, T4 RAL, T4 RYL
- Lubricator LUBM

PAGE 134 — **9.3 LML SYSTEM**
For light-medium loads
- Guide rails LML
- Carriage C3 RCL 16 NX
- Carriage C4 RCL 16 NX

PAGE 136 — **9.4 MOUNTING EXAMPLE**

U-LINE – PRODUCT DESCRIPTION
LM SYSTEM

KEY BENEFITS

- For light and medium loads
- Compact design of U-Line guides with inside carriage
- Guide rails with stainless steel shafts
- Carriages with stainless guide rollers

NX

LM system is based on rail, guide rollers and carriages to provide a complete guiding system. Guide rails and rollers can be used as single elements. In most cases the application is based on standard carriages and cursors.

Referring to the axis system below, the load capacities are tabulated as follows:

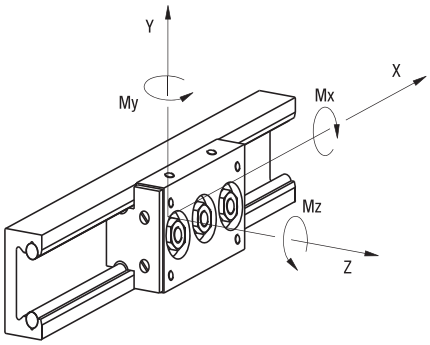

MAX. LOAD ON SINGLE CARRIAGE

The following table shows the maximum load that can be applied on a single carriage.

Guide	Carriage	Fy (N)	Fz (N)	Mx (Nm)	My (Nm)	Mz (Nm)
LM 30	C3 RCL 17 06 065	1000[1)]	300	3.3	5.8	10
	C4 RCL 17 06 085	1000	600	6.4	10	20
LM 40	C3 RCL 24 06 085	1810[1)]	520	7.6	15	26
	C4 RCL 24 06 114	1810	1040	15	25	52
LM 65	C3 RCL 35 10 115	4160[1)]	1200	26	45	78
	C4 RCL 35 10 152	4160	2400	50	75	155
LM 90	C4 RCL 35 10 180	4160	2400	75	95	200
LM 120	T4 RCL 35 10 150	4160	2400	110	120	200
	T4 RCL 35 10 220	4160	2400	110	200	350
	T4 RCP 42 10 150	5250	3030	140	150	260
	T4 RCP 42 10 220	5250	3030	140	250	440
LM 180	T4 PFV 43 22 180	6300	3120	185	200	400
	T4 PFV 43 22 280	6300	3120	185	350	715

1) Fy directed to load the two concentric guide rollers

The maximum load is based on the guide roller data (stud and bearing strength) and on maximum contact pressure between rail and roller of 1250 N/mm². Loading is considered to be acting in a single plane or axis only.

BASIC DYNAMIC LOAD OF SINGLE CARRIAGE

The following table shows the nominal load that corresponds to a nominal life of the bearing at 100 km.

The nominal carriage life can be estimated from the standard bearing formula.

$$L_{10} = (Ci / Pi)^3 \times 100 \text{ km}$$

Ci and Pi are the basic capacity and load applied for a specifi c direction.

Guide	Carriage	Cy (N)	Cz (N)	CMx (Nm)	CMy (Nm)	CMz (Nm)
LM 30	C3 RCL 17 06 065	2800[2)]	550	6	11	28
	C4 RCL 17 06 085	2800	1100	12	19	56
LM 40	C3 RCL 24 06 085	7200[2)]	1700	24	50	105
	C4 RCL 24 06 114	7200	3400	48	83	210
LM 65	C3 RCL 35 10 115	15800[2)]	3350	70	125	300
	C4 RCL 35 10 152	15800	6700	140	210	600
LM 90	C4 RCL 35 10 180	15800	6700	220	250	700
LM 120	T4 RCL 35 10 150	15800	6700	300	330	780
	T4 RCL 35 10 220	15800	6700	300	560	1335
	T4 RCP 42 10 150	24000	11000	500	530	1190
	T4 RCP 42 10 220	24000	11000	500	900	2030
LM 180	T4 PFV 43 22 180	15190	5300	320	335	965
	T4 PFV 43 22 280	15190	5300	320	600	1725

2) Cy directed to load the two concentric guide rollers

CALCULATION EXAMPLE:
FOUR CARRIAGES C3 RCL 35 10 115 PLATFORM
The common configuration is shown in the here following sketch:

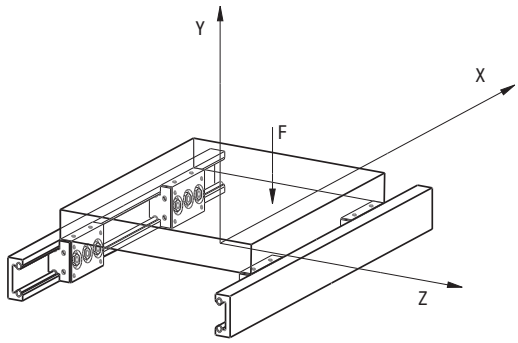

The platform moves along the two guide rails and has a load of “F” acting at 100 mm and 50 mm from the carriage centre.

Data: guide LM 65 and carriages C3 RCL 35 10 115

l_X = 400 mm
F = 6000 N
Z_F = 50 mm
l_Z = 300 mm
X_F = 100 mm

In this configuration the load on the most heavily loaded carriage is Py and can be calculated using the following formula:

$$P = \frac{F}{4} + \frac{F \cdot X_F}{2 \cdot l_X} + \frac{F \cdot Z_F}{2 \cdot l_Z} = 2750 \text{ N}$$

The load Fy shown in the “max. loads” table is 4160N (carriages mounted with eccentric roller on top), so that the system is protected against breakage.

To estimate the system life we proceed as follows:
from the nominal life table Cy = 15800 N

$$L_{10} = (15800 / 2750)^3 \times 100 = 18900 \text{ km}$$

IMPORTANT REMARK

To reach this value it is important to lubricate the rail, otherwise fretting corrosion between rail and roller can reduce the expected life.

U-LINE – PRODUCT DESCRIPTION
AUTO-ALIGNING SYSTEM

Auto-aligning systems are assembled with guide rollers RAL type on LM system carriages tables. The guide rollers RAL type allows axial displacement of the roller on the pin. An "O" ring retains the roller in position during the mounting. Auto-aligning systems compensate for opposite rail misalignment errors. They are useful for mounting inaccurately aligned structures or those structures subject to flexure.

CARRIAGES C3 RAL, C4 RAL, T4 RAL

Is used to compensate for Dx misalignment between opposite rails. The table or carriage with all guide rollers RAL / RALR type can be moved back and forth axially in the direction of the rail. Type RAL provides radial support only. Axial load, transverse to the direction of travel, is reacted by carriage type RCL on the opposite rail.

CARRIAGES C3 RYL, C4 RYL, T4 RYL

Rail misalignment Dy requires the ability for both carriages to rotate. The table or carriage RYL type, with guide rollers RCL / RCP in contact with a steel shaft of the LM rail and guide rollers RALR type in contact with the opposite shaft, allows carriage rotation ensuring at the same time the transverse direction control. The maximum Dy value is dependent on the distance between the rails and the tabulated maximum angle 'α' for that carriage.

NOTE: RYL carriage axial load capability is lower than the same size RCL / RCP carriage.

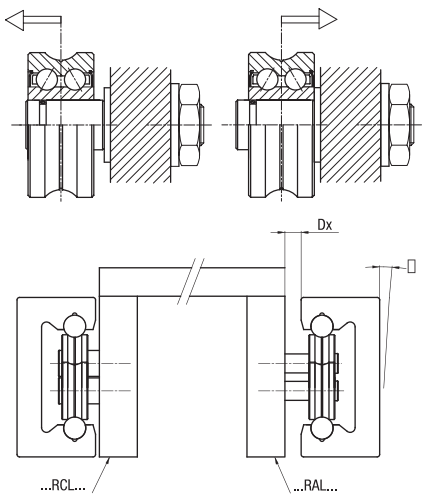

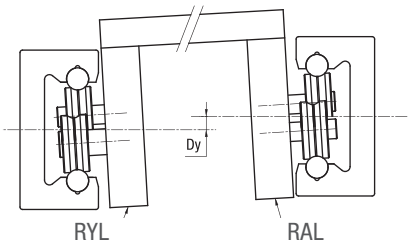

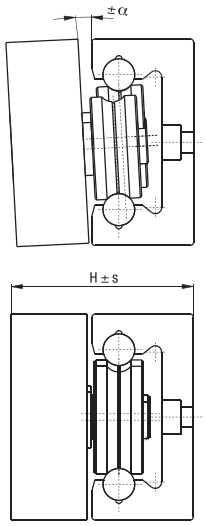

MAX TRANSVERSE MOVING ALLOWED BY AUTO-ALIGNING TABLES AND CARRIAGES

Rail	Carriage code[1]		α max. (°)	S max. (mm)	H nominal (mm)
LM 30	C3 RAL 17 06 065	C4 RAL 17 06 085	1	0.8	27.5
	C3 RYL 17 06 065	C4 RYL 17 06 085	1	–	27.5
LM 40	C3 RAL 24 06 085	C4 RAL 24 06 114	1	1	35.7
	C3 RYL 24 06 085	C4 RYL 24 06 114	1	–	35.7
LM 65	C3 RAL 35 10 115	C4 RAL 35 10 152	1	1	58.0
	C3 RYL 35 10 115	C4 RYL 35 10 152	1	–	58.0
LM 90	–	C4 RAL 35 10 180	1	1	60.5
	–	C4 RYL 35 10 180	1	–	60.5
LM 120	T4 RAL 35 10 150	T4 RAL 35 10 220	0.3	1	58.5
	T4 RYL 35 10 150	T4 RYL 35 10 220	0.3	–	58.5
	T4 RAL 42 10 150	T4 RAL 42 10 220	0.75	1.5	65.5
	T4 RYL 42 10 150	T4 RYL 42 10 220	0.75	–	65.5

1) See chapter „carriages" for table and carriage dimensions
Variations of dimension H exceeding ± s can compromise bearing axial moving and decrease the roller limit load, Fr

LML SYSTEM

Aluminium guide rails LML as well as RCL guide rollers with a plastic-coated outer ring are the components of this line. LML can be used whenever extremely compact dimensions, simple linear motion and an economic solution are required. LML system is suitable for manual and low precision movements, for safety doors, for the adjustment of cameras and sensors and many other products. Applications can be found amongst others in mechanical engineering, medical and food engineering or object monitoring.

MATERIALS, SURFACES, RUNNING CHARACTERISTICS

The guide rail, made of extruded aluminium, has a hard anodised surface. This grey-coloured protective coating ensures a significant protection against wear and corrosion. In addition, it has good tribological characteristics. The guide rollers are made of corrosionresistant bearing steel and their outer rings are coated with a special polyamide material. This material combination contributes to a further improvement of the already known good running characteristics of NADELLA roller guides and makes possible an absolutely low-noise linear motion without any stick-slip.
In contrast to steel to steel combinations, the plastic coating of the guide rollers is slightly flexible and allows higher production tolerances and thus a cost-efficient production.

LOAD RATING AND WORKING LIFE

The carrying capacity of the system is determined by the surface pressure between the plastic coating and the aluminium guide rail.
The working life is not calculated.
The following graph applies to the loads indicated in the tables:

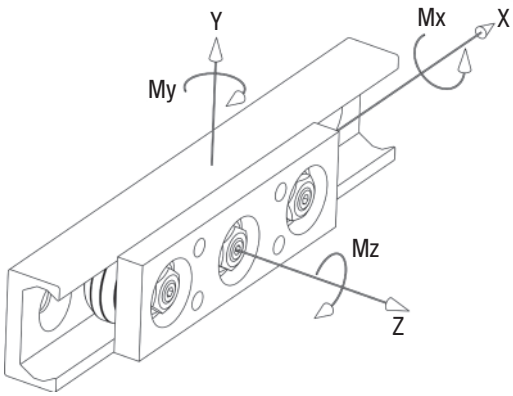

MAXIMUM LOAD ON INDIVIDUAL CARRIAGES

The table below shows the maximum static load that can be applied to an individual carriage for up to 100 hours without leading to permanent deformation of the outer rings. For short stress (< 2 s) and under dynamic load the values can be doubled.

Carriage	Fy (N)	Fz (N)	Mx (Ncm)	My (Ncm)	Mz (Ncm)
C3 RCL 16 NX	150[2)]	30	12.5	60	150
C4 RCL 16 NX	150	60	25	95	300

2) Fy with effect on the two concentric rollers

OPTION SLIDING GUIDE

For mostly static applications such as adjusting devices or for non-critical linear movements a suitable polyamide slide with incorporated lubricant is available.

Please contact our application engineers.

U-LINE – LM SYSTEM
GUIDE RAILS LM

Rail composed by an aluminium body and two shafts in steel, with two internal raceways.

Available in stainless steel version. NX

LM 30

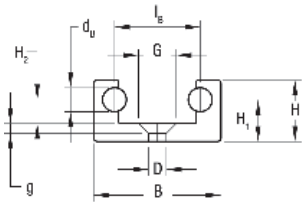

LM 40 / LM 65

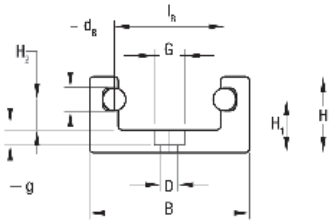

Hole layout for LM 30, LM 40, LM 65

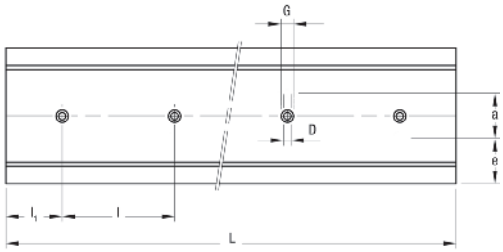

LM 90

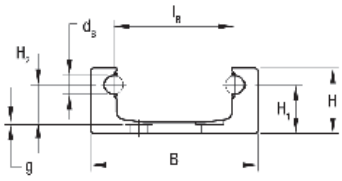

LM 120

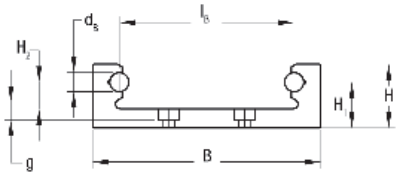

Hole layout for LM 90, LM 120

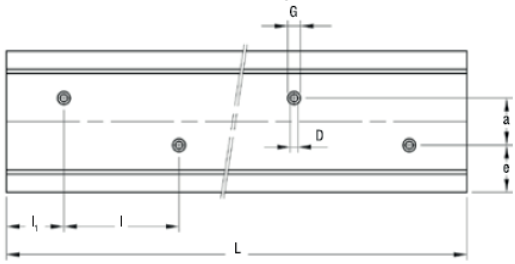

LM 180

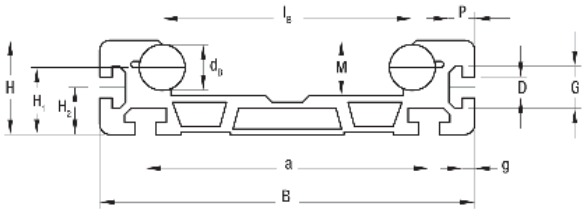

Guide rail	Hole layout
LM 30, LM 40, LM 65	Linear
LM 90, LM 120	Chevron
LM 120	No holes

Type	Dimensions (mm)															Moments of inertia 3) (cm^4)		Weight (kg/m)	L max. 4) (mm)
	d_B	l_B	B	H	H_1	H_2	M	D	G	g	a	e	P	l	l_1	J_x	J_y		
LM 30 1)	6	21.5	32	15.5	10.5	6	11	4.5	9.5	2.5	–	16	–	80	40	0.5	3	1.1	6000
LM 40 1)	6	29	42	20	14	8	14	4.5	8	4	–	21	–	100	50	1.2	8.8	1.5	6000
LM 65 1)	10	42.5	65	32	23.5	13.5	22	6.5	11	6	–	32.5	–	100	50	8.8	54.9	4.1	6000
LM 90 1)	10	65	90	35	26	20	29	9	15	0.5	38	26	–	100	50	16.4	160.2	4.7	6000
LM 120 1)	10	92	120	33.5	24	14	23.5	6.5	11	6	40	40	–	100	50	14.8	311.6	6	6000
LM 180	22	120	180	45	32	22.5	26.5	10 2)	20.1 2)	6	136	–	12.5	–	–	53.3	1096.6	13.1	6000

1) Available with stainless steel shafts (suffix NX)
2) Slot for nut DIN 508
3) Inertia value based on equivalent aluminium yield 70000 N/mm² complete with guide rod
4) Longer rails are supplied in sections with ground butt joints and, on request, with pin connection

HOLE LAYOUT

- Holes according to catalogue (SB)
- Finishes to drawing (NZ)
- Without holes (NF)

OPTIONAL FEATURES

- Ground one end: side of the first hole (1R), side of the last hole (2R)
- Ground both ends (RR)
- Chromium plated shafts (CH)
- Stainless steel shafts (NX)
- Pin based shaft connection (G)

Example of standard designation: LM 40 1720 NF

GUIDE ROLLERS RCL, RCP, PFV

PFV: Guide roller with gothic arch profile, based on ball bearing.
RCL / RCP: Guide roller with gothic arch profile, based on angular contact ball bearing.

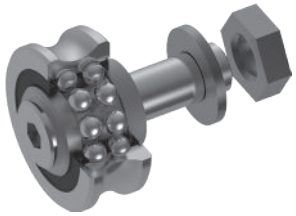

Available in stainless steel version. NX

RCL / RCP

CONCENTRIC

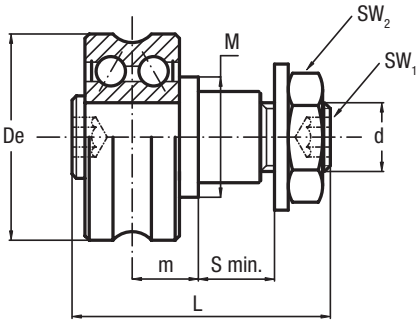

PFV

CONCENTRIC

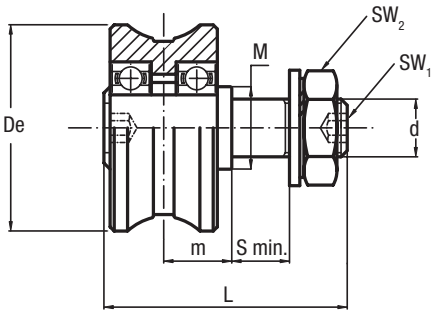

ECCENTRIC

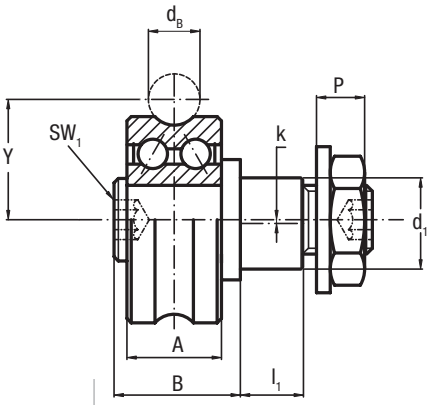

ECCENTRIC

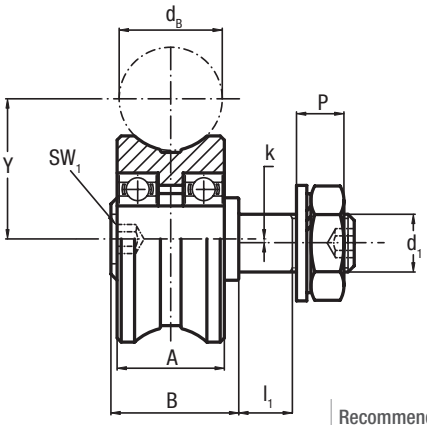

Type		Dimensions (mm)																	Recommended pairings
concentric	eccentric	De	d_B	d_1 [2] conc.	d_1 [2] ecc.	d	Y	m	S min.	P	L	A	B	l_1	M	SW_1	SW_2	k	
RCL 17.06[1]	RCLR 17.06[1]	17	6	5	6.5	M5x0.8	10.5	6	6	3.7	21	7	11	5.2	9	2.5	8	0.25	LM 30
RCL 24.06[1]	RCLR 24.06[1]	24	6	8	11	M8x1.25	14	7.7	7	5.6	28.2	11	14.7	6.5	14	4	13	0.5	LM 40
RCL 35.10[1]	RCLR 35.10[1]	35	10	10	10	M10x1.25	20.65	10.5	14	7	43	15.9	20.5	13	18	5	17	0.75	LM 65
RCP 42.10	RCPR 42.10	42	10	17	17	M12x1.25	24	12.5	12	9.5	50	19	24.5	11	25	6	19	0.75	LM 120
PFV 43.22[1]	PFVR 43.22[1]	43	22	12	12	M12x1.5	29	14	13	12.5	52	23	27	12	18	5	19	1	LM 180

1) Available in stainless steel (suffix NX)
2) Housing bore tolerance: H7

Type		Dynamic load (N)	Limit loads (N)		Life coefficients		Torque wrench settings [4] (Nm)	Weight (g)
concentric	eccentric	C_w [3]	Radial F_r	Axial F_a	X	Y		
RCL 17.06	RCLR 17.06	1400	530	150	1	3.28	3	20
RCL 24.06	RCLR 24.06	3600	1600	460	1	2.52	8	40
RCL 35.10	RCLR 35.10	7800	2400	650	1	2.93	20	130
RCP 42.10	RCPR 42.10	12000	4300	1100	1	2.73	24	185
PFV 43.22	PFVR 43.22	7600	3150	750	1	4	26	205

3) C_w basic load for 100 km
4) The torque wrench settings are given for non-lubricated threads; for lubricated threads, multiply figure by 0.8

- The guide rollers are complete with self-locking washers and hexagonal nut (DIN 439B) for fitting
- Pressure angle α for load calculation: 60°
- Standard shields ZZ type for RCL and RCP; NBR seals type RS for PFV

Tables refer to steel rollers, in case of inox version load capacity may change. Please contact technical department for further informations.

U-LINE – LM SYSTEM
GUIDE ROLLERS RAL

Floating guide rollers with "gothic arch" profile, with a double row of balls with oblique contact.

Available in stainless steel version. NX

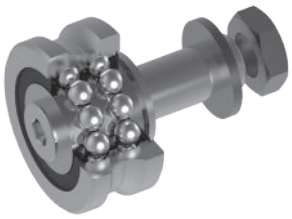

CONCENTRIC

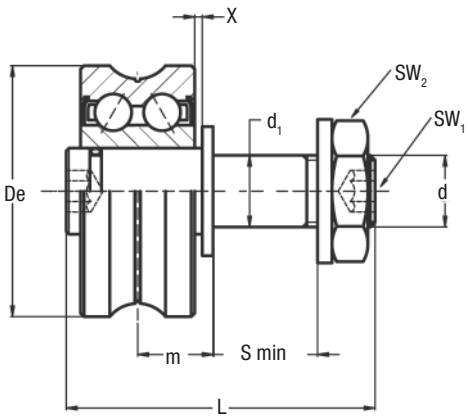

ECCENTRIC

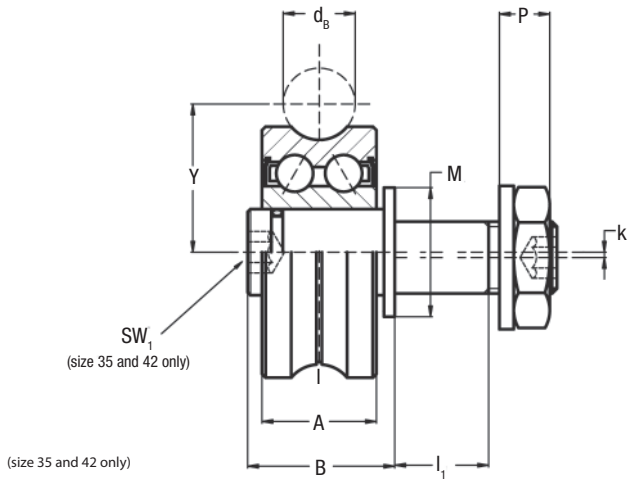

Type		Dimensions (mm)																		Suggested combinations
concentric	eccentric	De	d_B	d_1 [2] conc.	d_1 [2] ecc.	d	Y	m min.[3]	m max.[3]	S min.	P	L	A	B	l_1	M	SW_1	SW_2	k	
RAL 17.06[1]	RALR 17.06[1]	17	6	5	6.5	M5x0.8	10.5	6	7.6	6	3.7	20.5	7	10.5	5.2	9	2.5	8	0.25	LM 30
RAL 24.06[1]	RALR 24.06[1]	24	6	8	11	M8x1.25	14	7.7	9.7	7	5.6	27.5	11	14	6.5	14	4	13	0.5	LM 40
RAL 35.10[1]	RALR 35.10[1]	35	10	10	10	M10x1.25	20.65	10.5	12.5	14	7	43	15.9	20.5	13	18	5	17	0.75	LM 65
RAL 42.10	RALR 42.10	42	10	17	17	M12x1.25	24	12.5	15.5	12	9.5	49	19	23.5	11	25	6	19	0.75	LM 120

1) Available in stainless steel (suffix NX), seals in nitrile rubber type RS
2) Housing bore tolerance: H7
3) To ensure a safe and proper functioning the dimension m must not be higher than m max

Type		Dynamic load (N)	Limit load (N)	Torque wrench settings [5] (Nm)	Weight (g)
concentric	eccentric	C_w [4]	Radial F_r		
RAL 17.06	RALR 17.06	1400	450	3	20
RAL 24.06	RALR 24.06	3600	1400	8	40
RAL 35.10	RALR 35.10	7800	2100	20	130
RAL 42.10	RALR 42.10	12000	3400	24	185

4) C_w basic load for 100 km
5) The torque wrench settings are given for non-lubricated threads; for lubricated threads, multiply figure by 0.8

- The guide rollers are complete with self-locking washers and hexagonal nut for fitting
- Standard shields ZZ type

Tables refer to steel rollers, in case of inox version load capacity may change. Please contact technical department for further informations.

GUIDE WHEELS GLA

Guide wheel with double row of balls with oblique contact, with “gothic arch”.

Available in stainless steel version. NX

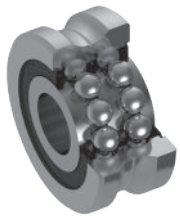

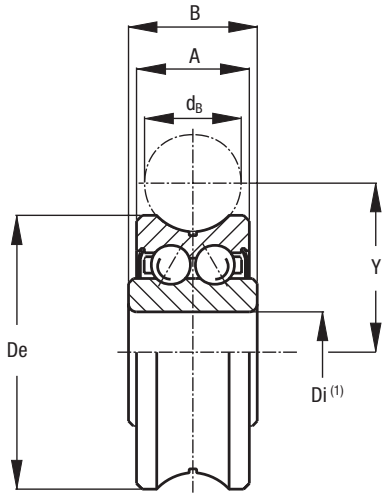

Type	Dimensions (mm)					
	De	d_B	D_i 2)	Y	A	B
GLA 17.06 1)	17	6	5	10.5	7	8
GLA 24.06 1)	24	6	8	14	11	11
GLA 35.10 1)	35	10	12	20.65	15.9	15.9
GLA 35.12	35	12	12	21.75	15.9	15.9
GLA 42.10	42	10	12	24	19	19
GLA 47.10	47	10	15	26.65	19	19
GLA 52.16	52	16	20	31.5	20.6	22.6

1) Available in stainless steel (suffix NX)
2) Tolerance of diameter Di: +0 / –0.008 mm

Type	Dynamic load (N)	Limit loads (N)		Life coefficients		Weight (g)
	C_w 3)	Radial C_{or}	Axial C_{oa}	X	Y	
GLA 17.06	1400	840	200	1	3.28	10
GLA 24.06	3600	2300	600	1	2.52	20
GLA 35.10	7800	4600	1200	1	2.93	80
GLA 35.12	7800	4600	1200	1	2.93	80
GLA 42.10	12000	6900	2100	1	2.73	100
GLA 47.10	14000	7900	2500	1	2.61	170
GLA 52.16	19000	10500	3300	1	2.73	230

3) C_w basic load for 100 km

- Pressure angle α for load calculation: 60°
- Standard shields ZZ type (GLA 52.16 with RS seals type)

Tables refer to steel rollers, in case of inox version load capacity may change. Please contact technical department for further informations.

U-LINE – LM SYSTEM
CARRIAGE C3 RCL, C3 RAL, C3 RYL

Carriage with body in anodised aluminium with 3 guide rollers.

Available in stainless steel version. NX

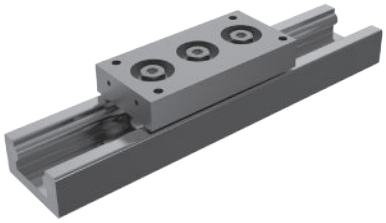

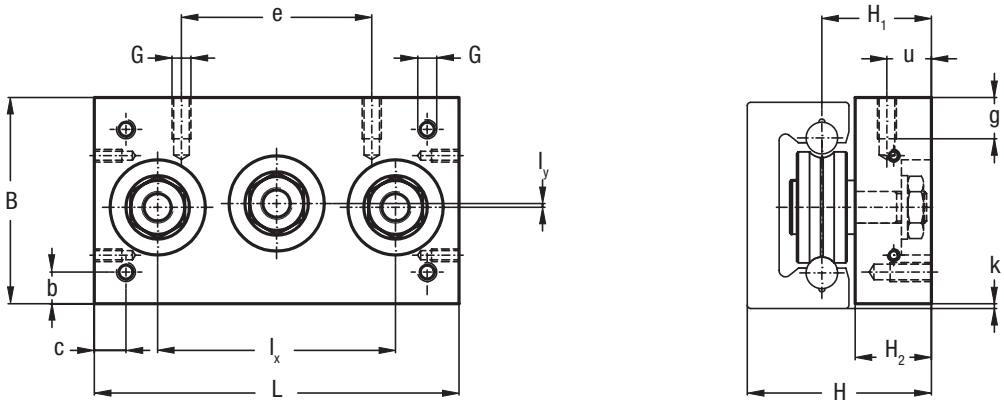

Type	Dimensions (mm)														Weight (kg)	Recommended pairings
	L	B	l_x	l_y	H	H_1	H_2	G	g	b	c	u	e	k		
C3 RCL 17 06 065	65	32	40	0.5	27.5	17	11	M4	6	4	6	5.5	24	0.5	0.1	LM 30
C3 RCL 24 06 085	85	42	58	1	35.7	21.7	14	M5	8	6	6	7	35	1	0.2	LM 40
C3 RCL 35 10 115	115	65	75	1.2	58	34.5	24	M6	10	10	10	14	60	1.5	0.8	LM 65

- Dimensions in the table are correct also for carriages C3 RAL, C3 RYL
- Available with stainless steel guide rollers (suffix NX)

CARRIAGE C4 RCL, C4 RAL, C4 RYL

Carriage with body in anodised aluminium with 4 guide rollers.

Available in stainless steel version. NX

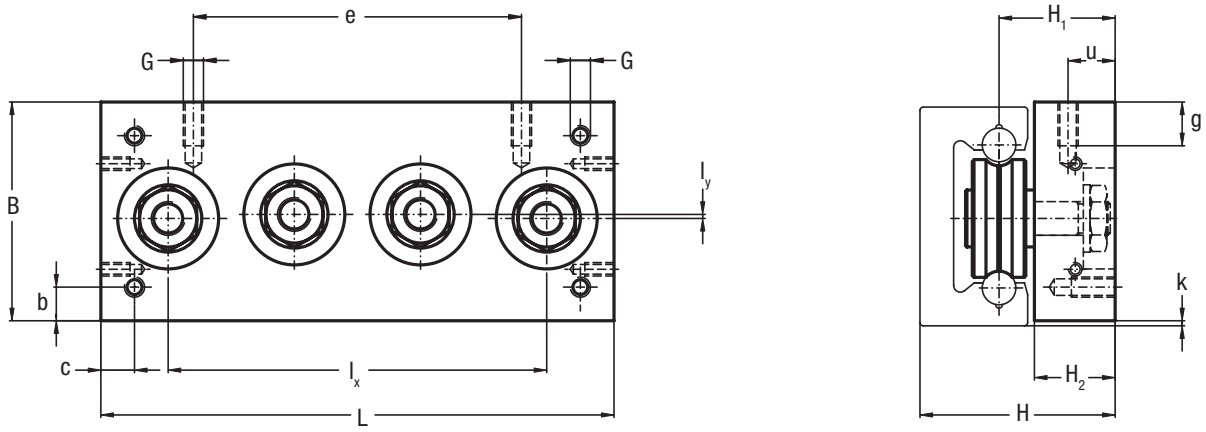

Type	Dimensions (mm)														Weight (kg)	Recommended pairings
	L	B	l_x	l_y	H	H_1	H_2	G	g	b	c	u	e	k		
C4 RCL 17 06 085	85	32	60	0.5	27.5	17	11	M4	6	4	6	5.5	44	0.5	0.15	LM 30
C4 RCL 24 06 114	114	42	87	1	35.7	21.7	14	M5	8	6	6	7	60	1	0.25	LM 40
C4 RCL 35 10 152	152	65	112.5	1.2	58	34.5	24	M6	10	10	10	14	90	1.5	1	LM 65
C4 RCL 35 10 180	180	90	135	23.7	60.5	34.5	24	M6	10	10	10	14	120	2	1.5	LM 90

- Dimensions in the table are correct also for carriages C4 RAL and C4 RYL
- Available with stainless steel guide rollers (suffix NX)

U-LINE – LM SYSTEM

CARRIAGE T4 RCL, T4 RCP, T4 PFV, T4 RAL, T4 RYL

Carriages with anodised aluminium body with four guide rollers with “gothic arch” profile.

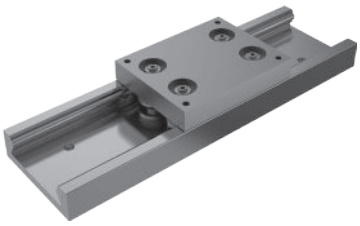

T4 RCL
T4 RCP

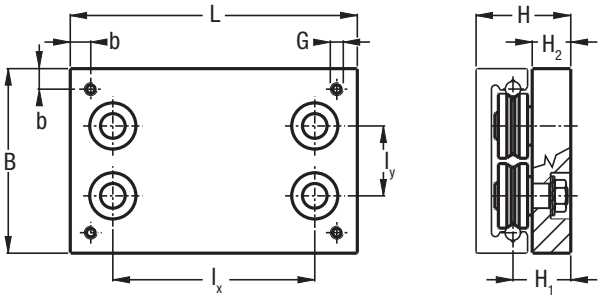

T4 PFV

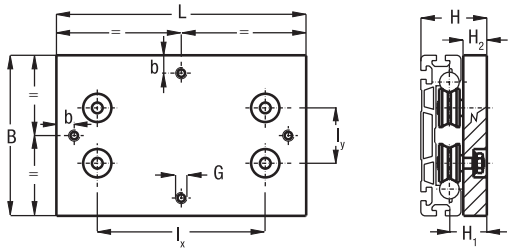

Type	Dimensions (mm)									Weight (kg)	Recommended pairings
	L	B	I_x	I_y	H	H_1	H_2	G	b		
T4 RCL 35 10 150	150	120	99	50.7	58.5	34.5	24	M8	10	1.6	LM 120
T4 RCL 35 10 220	220	120	169	50.7	58.5	34.5	24	M8	10	2.2	LM 120
T4 RCP 42 10 150	150	120	99	44	65.5	41.5	29	M8	15	2	LM 120
T4 RCP 42 10 220	220	120	169	44	65.5	41.5	29	M8	15	2.7	LM 120
T4 PFV 43 22 180	180	180	127	62	74	42	28	M10	20	3.1	LM 180
T4 PFV 43 22 280	280	180	227	62	74	42	28	M10	20	4.5	LM 180

- Dimensions valid also for T4 RAL and T4 RYL

LUBRICATOR LUBM

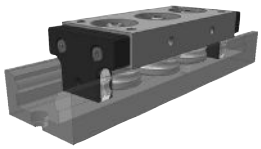

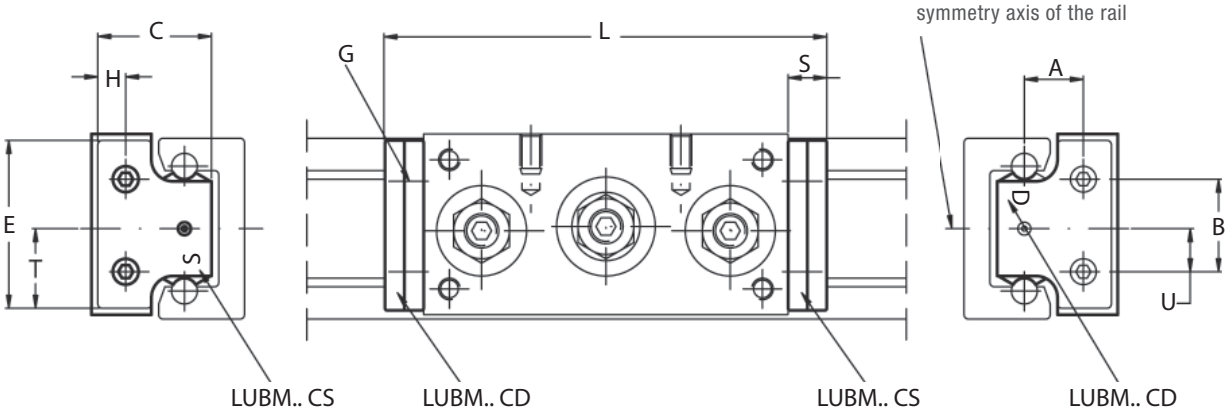

Type	Dimensions (mm)											Recommended pairings
	A	B	U	E	T	H	C	G[1]	S	L C3 RCL	L C4 RCL	
LUBM 030	9.5	16	8	30	15	6.5	20.5	M2.5	9	83	103	LM 30
LUBM 040 CD / CS	13.7	21.5	10	40	19	7	27	M3	9	103	132	LM 40
LUBM 065 CD / CS	20.5	30	15	63	30	13	44.5	M4	9	133	170	LM 65

1) One lubricator for packaging. Countersunk head screws for the mounting are already in the packaging

- The lubricator is supplied with the felt already lubricated. The lubricant has a mineral oil base
- The lubricator can be mounted on carriages RCL, RAL and RYL

OPTIONAL FEATURES

- Felt without lubricant (D)

U-LINE – LM SYSTEM
GUIDE RAILS LML

Rail totally in aluminium with two internal raceways.

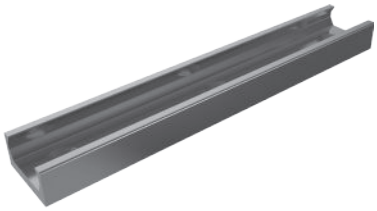

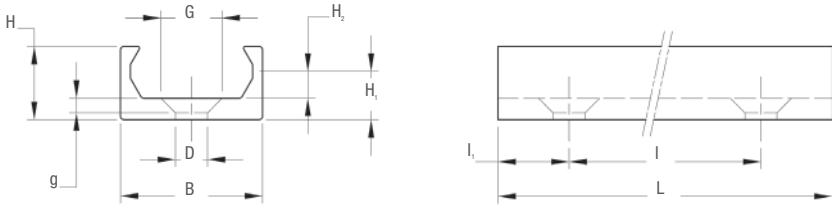

Type	Dimensions (mm)									Moments of inertia (cm)		Weight (kg/m)	L max. (mm)
	B	H	H_1	H_2	D	G	g	l	l_1	J_x	J_y		
LML 20	20	10.3	6.8	3.8	4.5	9.5	2.5	80	40	0.068	0.427	0.235	2800

Surface hard anodised

HOLE LAYOUT

- Holes according to catalogue (SB)
- Holes according to drawing (NZ)
- Without holes (NF)

Example standard rail: LML 20 1200 SB

CARRIAGE C3 RCL 16 NX

Carriages with 3 anti-corrosion rollers covered in plastic for guides LML 20.

Available in stainless steel version. NX

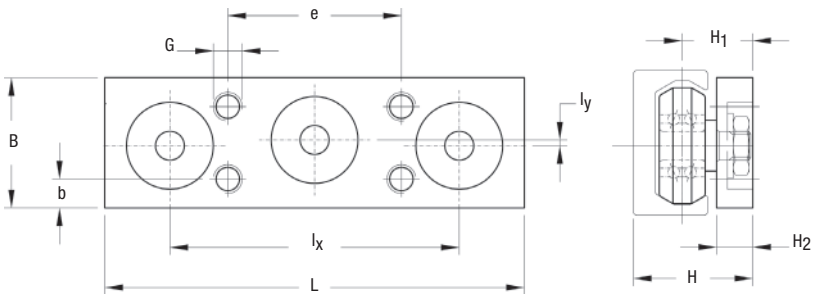

Type	Dimensions (mm)										Weight (g)
	L	B	I_x	I_y	H	H_1	H_2	G	b	e	
C3 RCL 16 NX	58	18	40	0.8	16.5	9.75	5	M4	4	24	33

CARRIAGE C4 RCL 16 NX

Carriages with 4 anti-corrosion rollers covered in plastic for guides LML 20.

Available in stainless steel version. NX

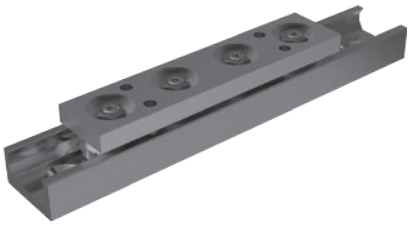

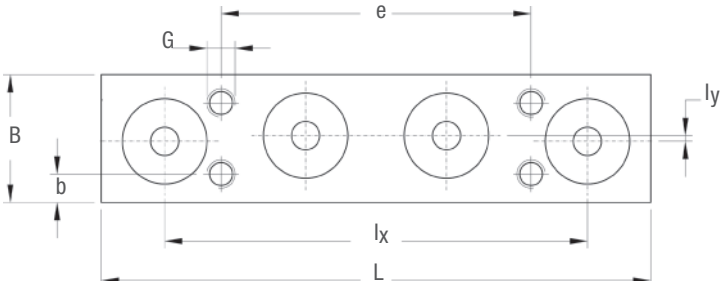

Type	Dimensions (mm)										Weight (g)
	L	B	I_x	I_y	H	H_1	H_2	G	b	e	
C4 RCL 16 NX	78	18	60	0.8	16.5	9.75	5	M4	4	44	44

U-LINE
MOUNTING EXAMPLE

9.4

Protective doors on machine tool
U-Line

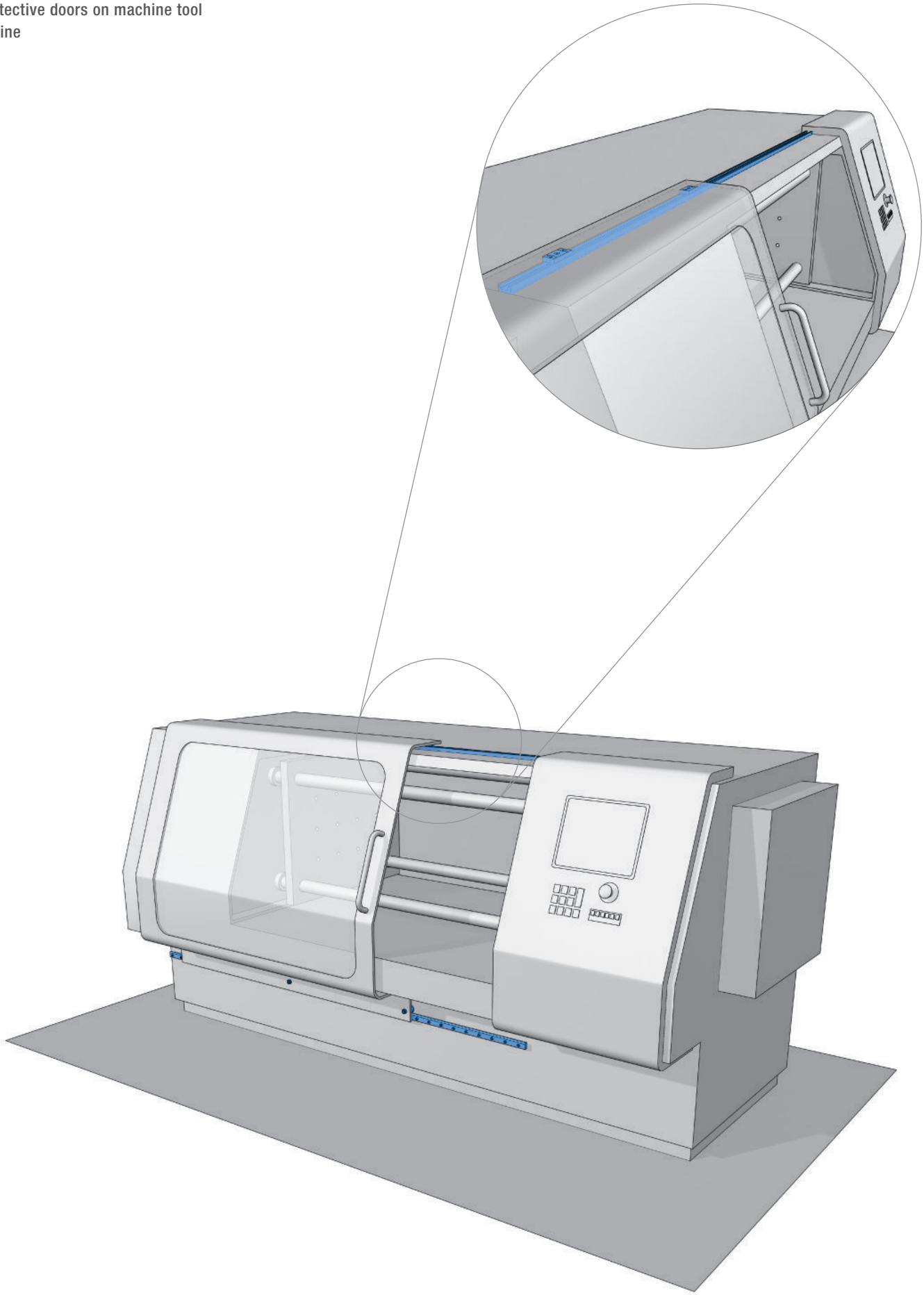

NOTES