ROLBLOC

Data sheet - rev. 1.0

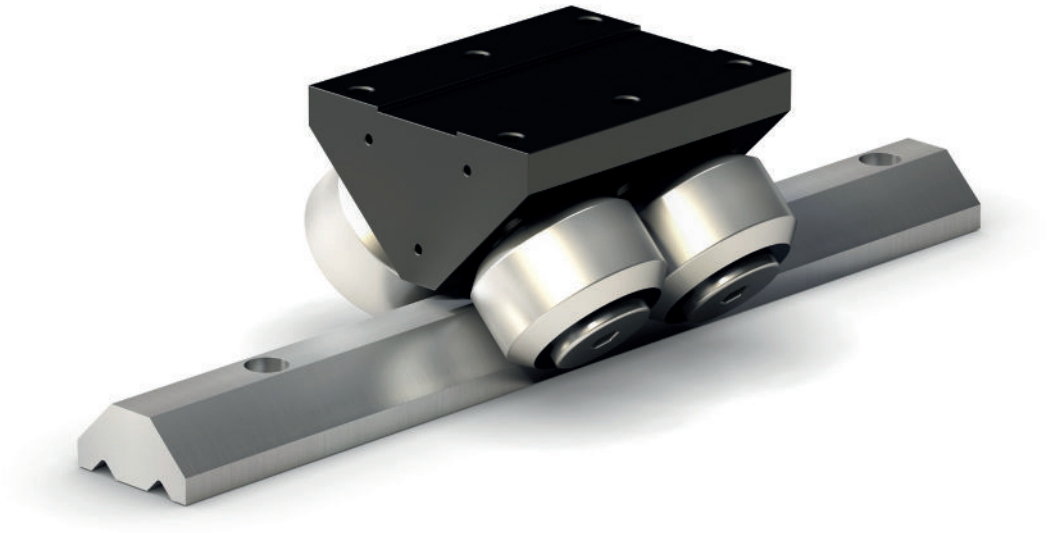

LINEAR COMPONENTS

myRollon

MyRollon is **your digital working platform** for linear guides, telescopic slides, actuators and actuator systems.

With myRollon, it is possible to determine the best linear motion solution according to your application specifications.

SCAN ME!

Index

Features and advantages 4
Guide rails GU 5
Carriages BL 6
Adjustment plates PR 8
Wipers RPT 9
Lubricator LUBL 9
Guide carriage combinations 10
Mounting examples 11

KEY BENEFITS

- For heavy loads and dirty environment
- Up to 15 t per carriage
- High compensation for a simple mounting
- Guide rails with different surface treatment
- Guide rollers in stainless steel version

NX

The carriages based on Rolbloc's system are recommended for applications with heavy loads, high frequency of work and aggressive environment (dust, abrasive). For the profiled guide rollers, the contact beween the rollers and the rail takes place on the ground raceways, which are inclined in respect of the rotation axis of the guide roller. Due to this inclination angle in the contact area there is a dragging proportional to the dimension of the contact area and to the value of the inclination angle. In the Rolbloc system the rotation axes of the roller guides are parallel to the raceways of the rail, with the following pure rolling. The pure rolling reduces the superficial stress and the effects of the dust between the surfaces.

CARRIAGE BL2 .., BL4 ..

Rolbloc carriages BL2... and BL4... are composed by a body in burnished steel on which are mounted two or four roller guides equipped with tapered rollers (similar to flat roller guides type PK...C). The final part of the code (that can be 52, 75 or 115) shows the external diameter of the roller guides.

ROLBLOC BL2..DS WITH DISCHARGE SYSTEM

Rolbloc carriages BL2 ... DS have a special block profile with a profiled surface close at the rail GU...M or MT. The space S is set so that during normal operation there is no contact between the block and the rail and the carriage moves on its rollers. When the load goes over the normal value the deflection of the rollers reduces the space S since there is direct contact between the rail and the block. In this way the system is protected versus extremely and or uncontrolled loads. When the extra load is removed the system returns in its normal position thanks to the rollers' elasticity.

Rolbloc in DS version is a simple and effective solution in the following applications:

- Systems that have to be blocked in a position. The blocking system, i.e. a hydraulic cylinder or a bolt used as tie beam, can push directly the carriage against the rail without component damage risk.
- Systems where high stiffness support is required in a static operation. When the block is pushed in contact with the rail the system stiffness increases and stability is given versus deformation and vibrations
- Systems that have to stand shocks and extra load that could compromise the roller resistance. This allows to select the component size on the normal load during the operation and not on the pick-force.

HOW IT WORKS

The carriage is realized with a special design that provides a gap between carriage body and rail.

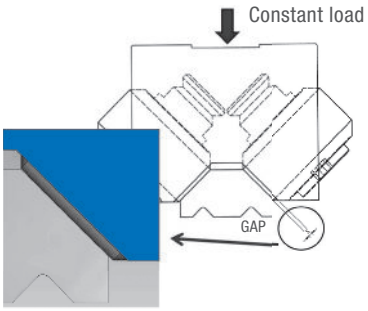

When a heavy load is applied, the rollers are free to flex until the carriage body leans on the guide, discharging on it all the load that otherwise would break the rollers. After removing the load the carriage is again able to move regularly on the rail.

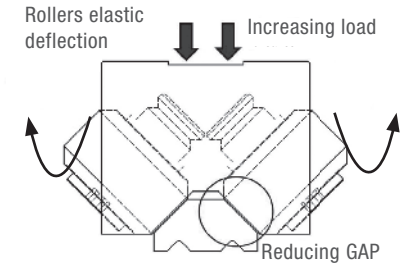

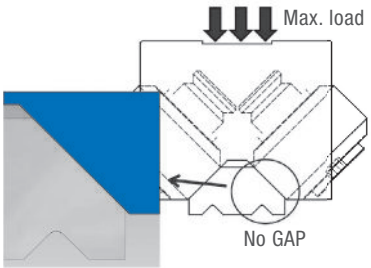

GUIDE RAILS GU ... M, GU ... MT

Rail in steel, ground raceways.

GU 62 MT
GU 80 MT

GU 62 M
GU 80 M

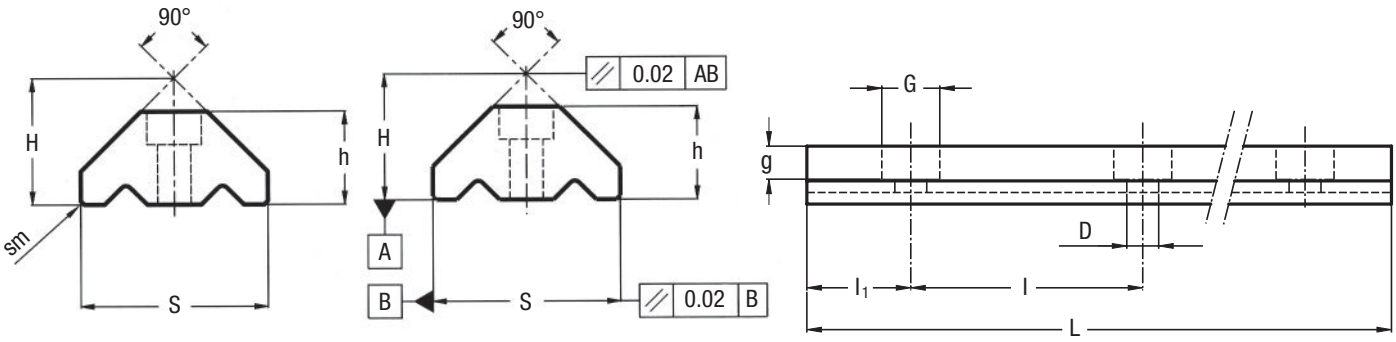

Type	Dimensions (mm)									Weight [2] (kg/m)
	H ± 0.05	h ± 0.05	S ± 0.05	D + 0.1	G	g	sm	l	l_1	
GU 62 MT	43.5	32.5	63.5	11	18	11	2 x 45°	120	30	11.80
GU 80 MT	56.7	41.5	81.5	13.5	20	13	2 x 45°	120	30	20.30

Max. length in single element L = 4020 mm.
Longer rails are made by juxtaposing several elements with ground end.

1) Weight without holes

Type	Dimensions (mm)								Weight [2] (kg/m)
	H ± 0.05	h ± 0.05	S ± 0.05	D + 0.1	G	g	l	l_1	
GU 62 M	42	31	62	11	18	11	120	30	10.9
GU 80 M	55.2	40	80	13.5	20	13	120	30	20

Max. length in single element L = 4020 mm.
Longer rails are made by juxtaposing several elements with ground end.

2) Weight without holes

RAILS FINISHING

- Drawn, induction hardened and sandblasted tracks (MT)
- Drawn, induction hardened and ground (M)
- Induction hardening on raceways only
- Holes according to catalogue (SB)
- Finishes to drawing (NZ)
- Without holes (NF)

OPTIONAL FEATURES

- Ground one end: side of the first hole (1R), side of the last hole (2R)
- Ground both ends (RR)
- Chemical nickel-plating (NW)

Example of standard designation: GU 62 MT 4300 SB

CARRIAGES BL

Carriage with burnished body.

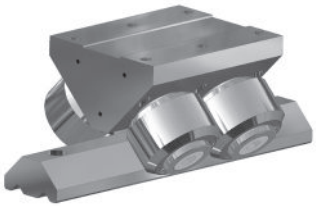

Available in stainless steel version. NX

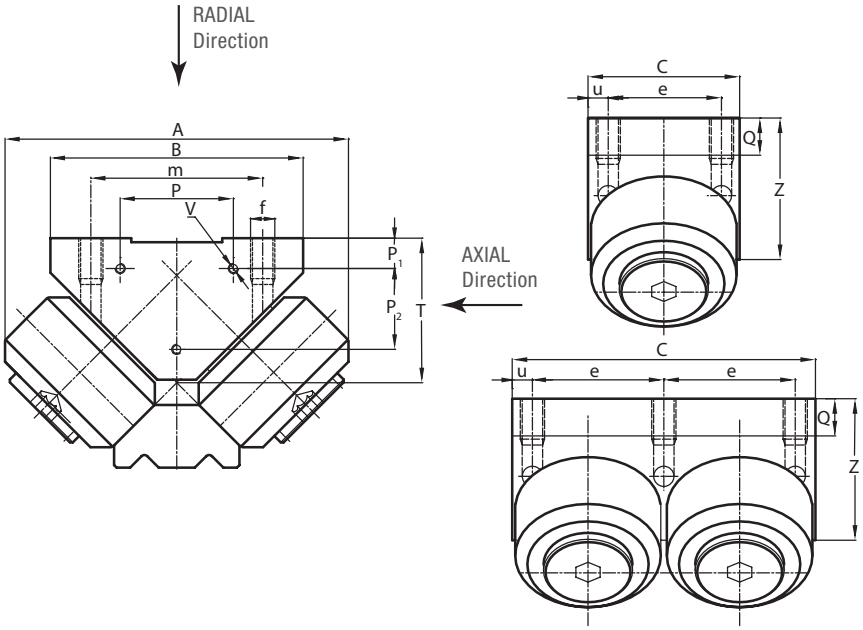

BL 2 ... two guide rollers block

BL 4 ... four guide rollers block

Type	Dimensions (mm)														Weight (kg)
	A	B 1)	C	P	P_1	P_2	V	m	e	u	f	Q	T	Z	
BL 252	136	90	56	54	14	16	M4 x 7	70	40	8	M8	12	43	47	2.4
BL 452	136	90	112	54	14	16	M4 x 7	70	48	8	M8	12	43	47	4.8
BL 275	170	125	76	56	15	40	M5 x 8	85	56	10	M12	17.1	71.5	70	6.5
BL 475	170	125	152	56	15	40	M5 x 8	85	66	10	M12	17.1	71.5	70	13
BL 2115	243	170	125	80	15	70	M5 x 10	120	95	15	M14	22	99.8	93	21.6
BL 4115	243	170	250	80	15	70	M5 x 10	120	110	15	M14	22	99.8	93	43.2

1) Tolerance +/- 0.05 for all dimensions

Type	Dynamic load (N)	Limit loads (N)		Life coefficients	
	C_w 2)	Radial F_r 3)	Axial F_a 4)	X	Y
BL 252	59000	16800	8400	1	1
BL 452	118000	33600	16800	1	1
BL 275	99000	44200	22100	1	1
BL 475	198000	88400	44200	1	1
BL 2115	275000	78600	39300	1	1
BL 4115	550000	157200	78600	1	1

2) C_w basic load for 100 km, load perpendicular to the roller side fixing surface
3) Loads perpendicular to the roller side fixing surface
4) Loads parallel to the roller side fixing surface

- On request, the guide rollers can be supplied in stainless steel (suffix NX) and with Viton seals for operating temperatures up to 120°C (suffix V, not available for dimension BL ... 115). Internal rolling elements in standard bearing steel
- Pressure angle α for loads checking calculation: 45°
- Standard seals: material NBR, RS type

NEW Carriages BL 2215 and BL 2280 can be supplied on request, for limit radial loads up to 540000 N.

CARRIAGES BL ... DS WITH DISCHARGE SYSTEM

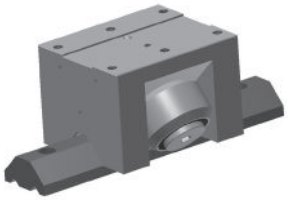

Available in stainless steel version. NX

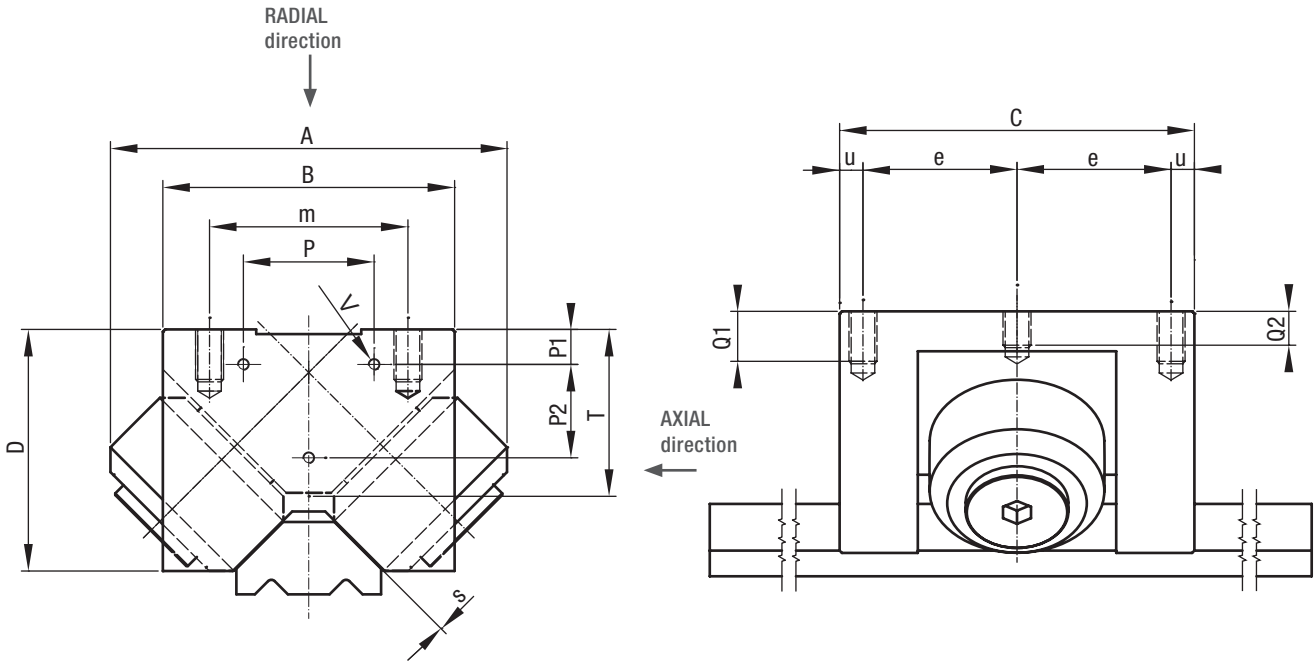

Type	Dimensions (mm)														Weight (kg)
	A	B	C	P	P1	P2	V	m	e	u	f	Q1	Q2	T	
BL 252 DS	136	90	112	54	14	16	M4 x 7	70	48	8	M8	16	12	43	4.8
BL 275 DS	170	125	152	56	15	40	M5 x 8	85	66	10	M12	20	15	71.5	13

Type	Dynamic load (N)	Limit loads (N)		Life coefficients	
	C_w 1)	Radial F_r 2)	Axial F_a 3)	X	Y
BL 252 DS	59000	16800	8400	1	1
BL 275 DS	99000	44200	22100	1	1

1) C_w basic load for 100 km, load perpendicular to the roller side fixing surface
2) Loads perpendicular to the roller side fixing surface
3) Loads parallel to the roller side fixing surface

- On request, the guide rollers can be supplied in stainless steel (suffix NX) and with Viton seals for operating temperatures up to 120°C (suffix V, not available for dimension BL ... 115). Internal rolling elements in standard bearing steel
- Pressure angle α (for loads checking calculation): 45°
- Standard seals: material NBR, RS type

ADJUSTMENT PLATES PR

Adjustment plates for BL carriages.

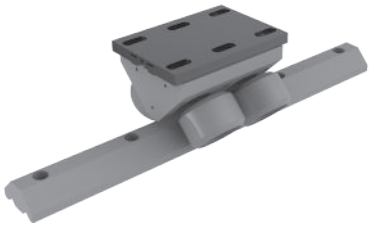

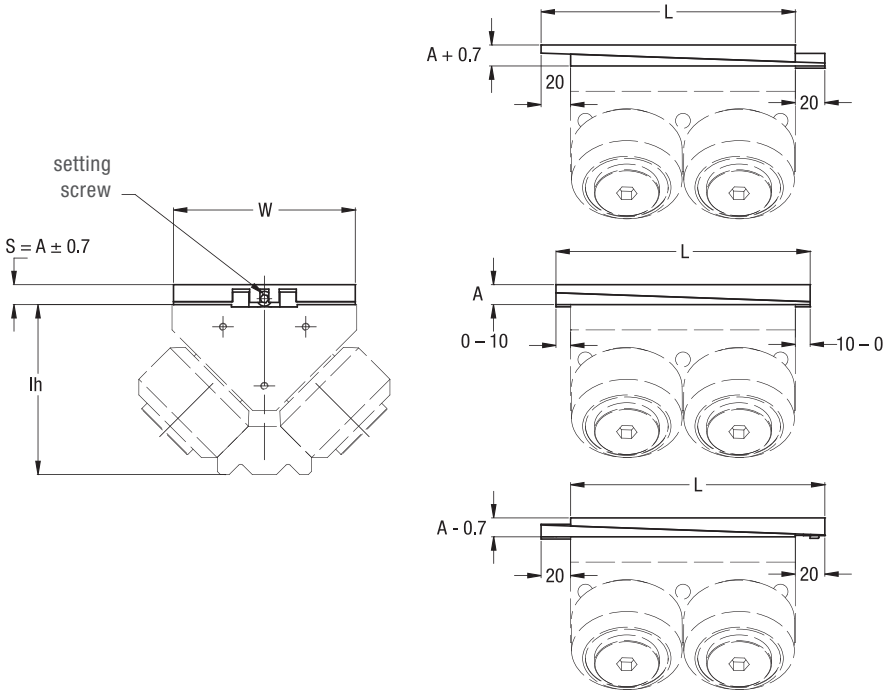

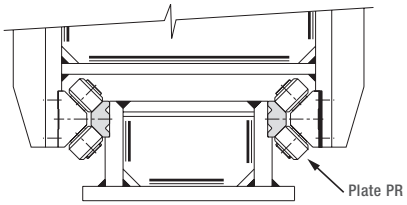

A typical example of Rolbloc system assembly, with opposing parallel guides is shown. For optimal assembly, it is recommended to use adjustment plates PR on one side

Type	Dimensions (mm)			Weight (kg)	Combination with ROLBLOC carriages
	L	W	A		
PR 252	76	88	13.5	0.5	BL 252
PR 452	132	88	13.5	1	BL 452, BL 252 DS
PR 275	96	123	13.5	1	BL 275
PR 475	172	123	13.5	1.9	BL 475, BL 275 DS
PR 2115	145	168	17	2.9	BL 2115
PR 4115	270	168	17	5.7	BL 4115

The adjusting plates allow to easily set the proper preload during the mounting on the machine by acting on the dimension lh.

The two steel plates are placed between the carriage Rolbloc and the mounting surface. Setting is done by the setting screw before the final tightening of the screws used to mount the Rolbloc.

Dimension W of the plates is 2 mm lower than Rolbloc central body.

Use the Rolbloc side as a reference for the positioning.

When the plates are set in the mid position (thickness A) they can be shifted 10 mm from the block centreline. The allowed dislpacement can be reduced with setting to zero for the minimum or maximum regulation. Consider 10 mm of space beyond the plate length on each side (20 mm over the block length) to use the full thickness setting capability +/- 0,7 mm.

WIPERS RPT

Material: Plastic (polyzene), color: green

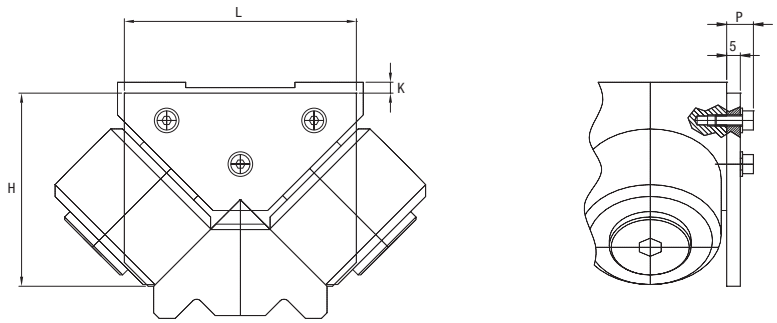

Type	Dimensions (mm)				Combination
	L	H	K	P	
RPT 52	85	70.75	4 ± 1.5	9.8	BL 252, BL 452
RPT 75	120	99.25	4 ± 2	11	BL 275, BL 475
RPT 115	165	135.55	5 ± 2	11	BL 2115, BL 4115

LUBL LUBRICATION SYSTEM FOR ROLBLOC

Material:
Plastic (polyzene), color: green and aluminum

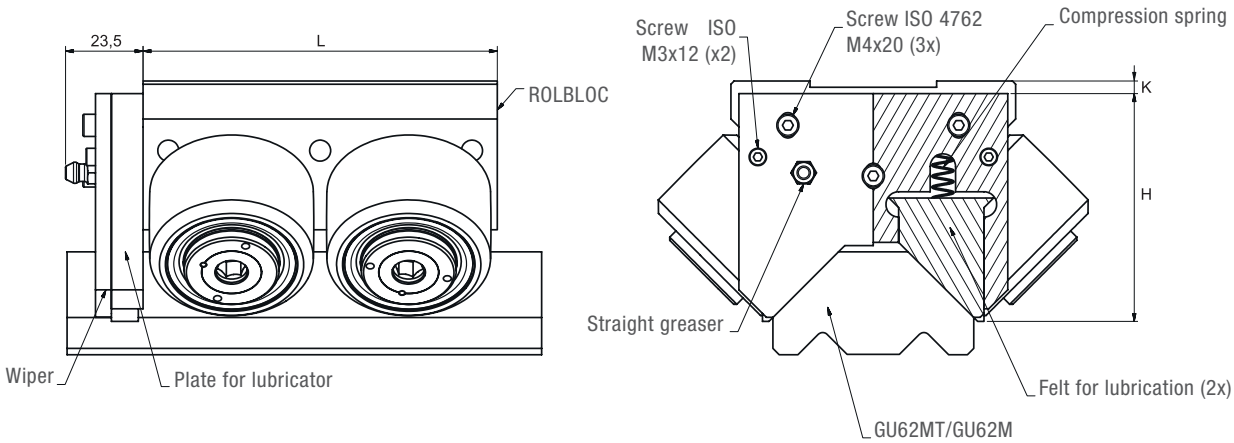

Type	Dimensions (mm)			Combination
	L	H	K	
LUBL 52	85	72	4 ± 1.5	BL 252, BL 452
LUBL 75	120	105.5	4 ± 1.5	BL 275, BL 475
LUBL 115	165	135.5	4 ± 1.5	BL 2115, BL 4115

GUIDE / CARRIAGE COMBINATIONS

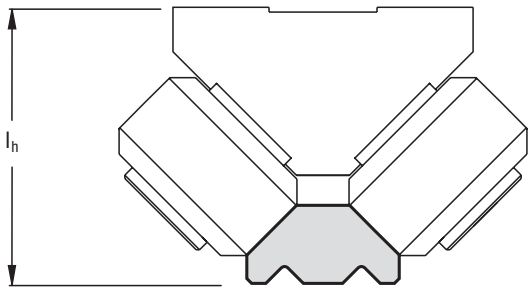

Guide \ Carriage	Type	l_h (mm)					
		BL 252 / DS	BL 452	BL 275 / DS	BL 475	BL 2115	BL 4115
	GU 62 MT	86.5	86.5	115	115	–	–
	GU 62 M	85	85	113.5	113.5	–	–
	GU 80 MT	–	–	–	–	156.5	156.5
	GU 80 M	–	–	–	–	155	155

MOUNTING EXAMPLE

Palletising equipment
Rolbloc
V-Line
Multi-Motion-Line

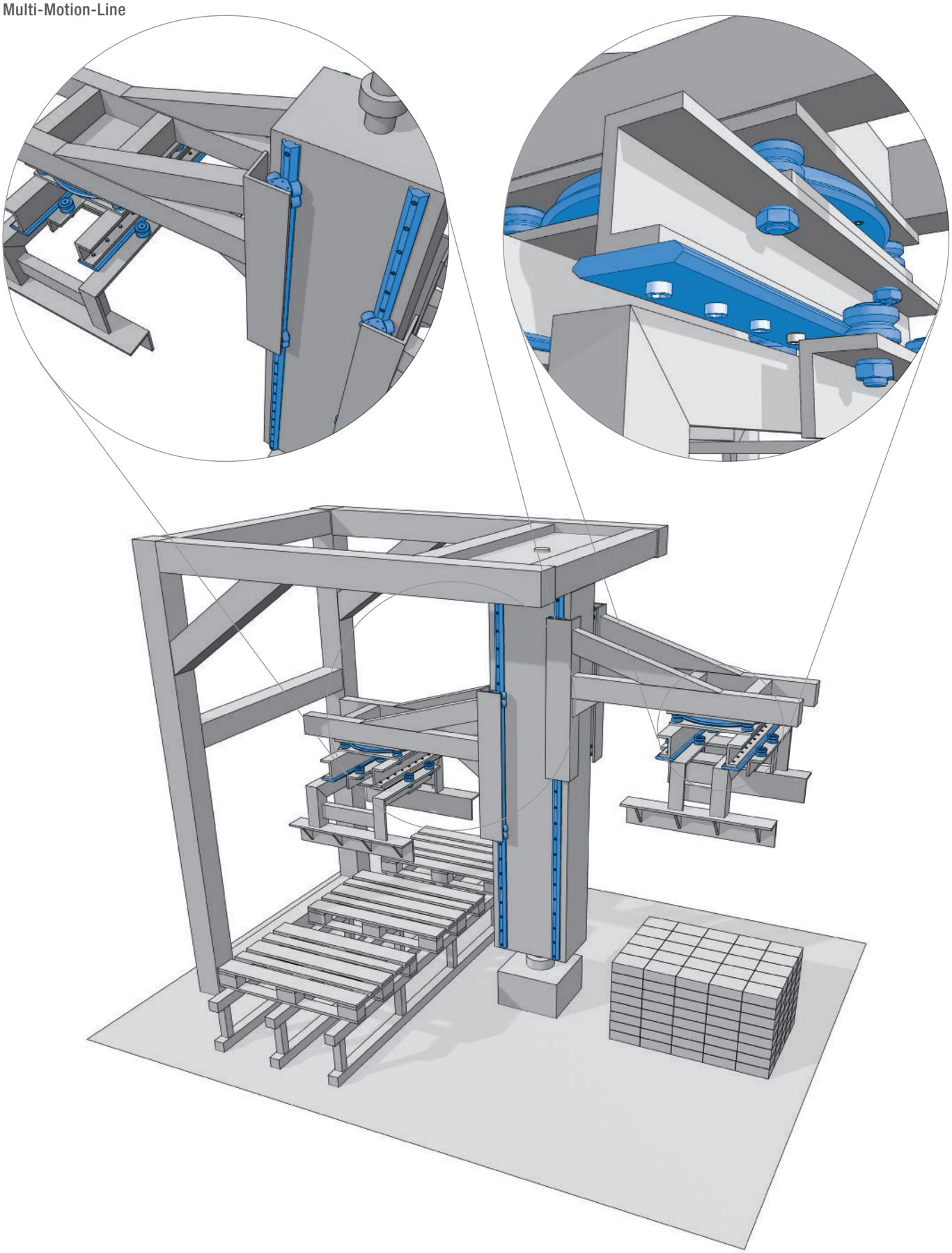

TECHNICAL FEATURES

With this line of products, NADELLA confirms the aim to provide manufacturing solutions tailored to the user's needs in order to achieve simple automation at a low cost. The process under way of transferring production automation and relevant handling onto increasingly heavier and cumbersome units has prompted us to seek original and flexible components for the different commodity sectors.

We have accumulated sound working experience in the following sectors:

- Marble-working machinery
- Foundry machinery
- Metal sheet working machinery
- Special lifting machines
- Pick up
- Automatic warehouses
- Textile machines
- Machine tool protections and utilities
- Oxygen cutting machines

Our Technical Department works with Customers and recommends the best component choice by making the calculations needed to determine the best life.

GUIDES

LENGTH

The maximum length of each single guide component is shown on the dimensional tables. The standard lengths of the rails are determined by adding the product of the fixing hole centre distance and the number of holes to twice the end dimension (see dimensional tables).

Length	≥ 150 < 420	≥ 420 < 1050	≥ 1050 < 2040	≥ 2040 < 4020	≥ 4020
Length tolerance	± 0,5	± 0,8	± 1,2	± 2	± 2,5

JOINTS

For strokes of greater length, the guide components can be joined after grinding the end faces (suffix R or RR). To maintain the hole centre distance tolerance, when ordering always specify the number of individual rails making one continuous length. Please specify in the order when rails have to be matched. The junctions are marked (letters and numbers) to avoid a mix-up of different rails.

FIXING HOLES

The guides are available with standard holes, as shown in dimensional tables, with special hole layout or without holes (see order code referencing) Standard tolerance for hole position is ± 0,25 mm.

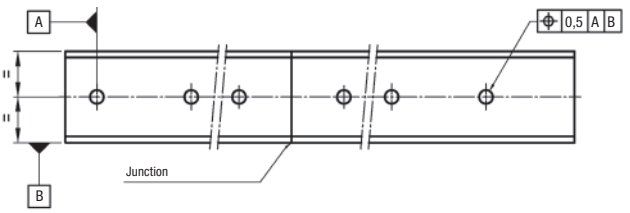

The standard boring layout is designed to fit most common application requirements, but connection strength has to be evaluated on the application case.

STEEL GUIDES

GENERAL

Steel rails are made of bearing steel to give best stability and durability. Raceways are induction hardened to achieve 58 HRC hardness minimum. The rail core remains soft to allow easy machining. Rails can be provided with different finishes to meet specific application requirements.

- Guide rails MT type: Profile is produced by cold drawing process, raceways are induction hardened and sandblasted to improve surface strength and finish.
- Guide rails M type: Profile is usually produced by cold drawing process, induction hardened on raceways and ground to improve surface finish and profile geometry and to remove the partially decarburised surface (0.1 mm max. on cold drawn rails ... MT). Ground rails have to be used when there are high loads, heavy duty cycles or when there is a high accuracy requirement.
- Guide rails MC type (flat rail GP ... MC only): MC rails are induction-hardened on every side and finished by-a-rough grinding.

OPTIONS

Corrosion protection

For use in oxidising environments or in the presence of corrosive agents, the guides are available with chemical nickel-plating protective anticorrosion treatment (suffix NW). This treatment features substantial mechanical characteristics together with a resistance to salty mist corrosion superior to that of hard chrome. On request many rails are available in stainless-steel version (suffix NX) NX. On request can be supplied rails with different surface treatment, as chrome plating and phosphating. Rails LS are supplied with a standard surface treatment of zinc plating (suffix GZ). A wide range of stainless steel rails is available (suffix NX).

CIRCULAR RAIL

On request circular rails can be provided. Circular rails can be used as an alternative to rotating devices or as junction between straight rails.

TECHNICAL FEATURES

Standard rail straightness (for non-mounted rails) is 0.5 mm/m max. Higher accuracy can be supplied on request.

TEMPERATURE

Standard operating temperature range is –20°C up to 150°C. In lower or higher temperature applications please contact NADELLA Technical Service. Special care is required if guide rollers are operating at maximum temperature.

ALUMINUM GUIDES

GENERAL

Made by joining an aluminium alloy support element and hardened steel rods that form the sliding surfaces. The best features of the two materials and relevant working technologies are combined to give the lightness of the alloy and the hardness and surface finish of the rods. Guides of this type can be used for structural functions; they have a high moment of inertia that enables them to be used in many applications as carrying structures. Aluminium extruded profiles are stabilised and anodised. Sliding rods are induction hardened and ground.

OPTIONS

Corrosion protection

NX For use in oxidising environments or in the presence of corrosive agents, the guides of this series can feature stainless-steel bars (suffix NX).

Chromium-plated rods

Optionally chromium-plated rods are available (suffix CH); the thickness of the chromium plating is 10 ± 5 µm with hardness ≥ 800 HV. Please check option availability in dimensional tables.

JOINTS

In case rail made by multiple C-DC or LM rails the most efficient joint can be realized with the insertion of a dowel pin inside the rods. This solution allows for simple assembly at the site and maintains alignment under load.

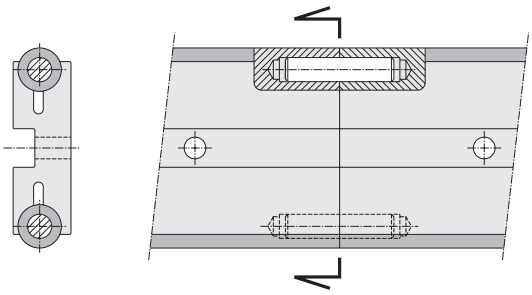

For rails FWS/FWN the joint can be realised by protruding the rods of one rail in order to engage them in the profile of the next rail. There will be a small gap between the aluminium profiles. The steel shafts are joined without gap.

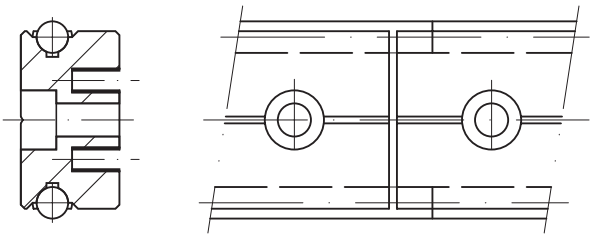

TECHNICAL FEATURES

Standard rails' straightness (for non mounted rails) is 0.5 mm/m maximum. Higher accuracy can be supplied on request.

TEMPERATURE

Standard operating temperature range is –20°C up to 70°C. Applications with frequent temperature variation should be avoided. For operating conditions outside the given range please contact NADELLA Technical Service.

GUIDE ROLLERS

GENERAL

NADELLA provide a wide range of guide rollers to be able to meet different technical and economic requirements. All guide rollers are produced in concentric and eccentric versions to allow backlash adjustment during assembly on final equipment. Eccentric rollers are identified by additional R in the code.

The sides of the races of the guide roller are slightly convex. Besides reducing rolling friction, this also permits offsetting slight guide flexing or small assembly alignment errors.

Guide rollers are fitted with seals or shields for bearing protection and lubricant retention as described in dimensional tables.

Guide rollers based on needle or tapered roller bearings (FRN ... EI,RK ...,PK ...) are recommended for critical applications with heavy axial loads and / or shock loading. Guide rollers based on ball bearings (FR ... EU, PFV, RCL) are more suitable for lighter loads or high dynamic systems.
The carriages based on Rolbloc's system are recommended for applications with heavy loads, high frequency of work and aggressive environment (dust, abrasive).

When mounting guide rails opposite to each other with connected carriages, as shown in the next sketch, a high level of parallelism between the guide rails is required when axially rigid rollers are used. To avoid operating problems it is recommended to use axially rigid fixed rollers on one carriage e.g. FR ... EU / FRR … EU and axially movable rollers on the other carriage e.g. FRL ... EU / FRLR ... EU. Movable rollers allow a little misalignment between the opposite mounted guide rails.

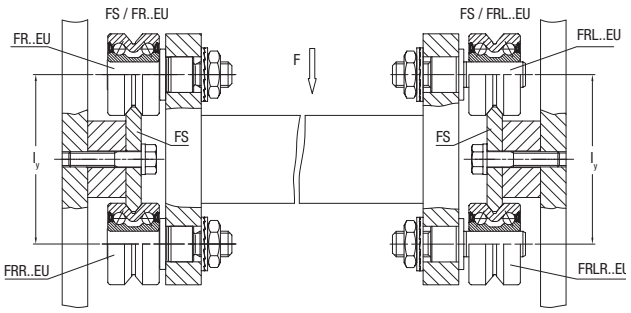

Another solution is to use one profiled guide rail e.g. FS and on the opposite side a flat rail e.g. GP in connection with rollers GC or PK.

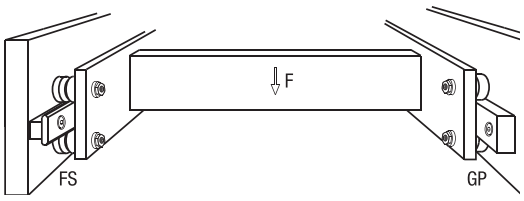

Lubrication
Guide roller FRN ... EI, GC, FG permits bearing relubrication. All other guide rollers are long life lubricated.

Temperature
Guide roller should not operate at constant temperature above 80°C. For short durations 100°C can be accepted. For higher temperature please see the “option section”.

Speed limit
Max. velocity has to be determined for each application relevant to the guide roller type, size and load conditions. As general value, in normal conditions maximum speed is 4 m/sec but, with the correct choice of the components, the speed can reach 10 m/s. Contact NADELLA Technical service in case of specific request.

OPTIONS
Corrosion protection

NX For use in oxidising environments or in the presence of corrosive agents, the guide rollers are available in stainless steel (suffix NX) the guide rollers with tapered rollers (RKU, RKY / X, FKU, FKY / X) and needles (FRN) are equipped with standard bearings. Check in the dimensional table component availability.

High temperature
On request guide rollers can be equipped with Viton seals to operate at temperatures up to 120°C (suffix V). Check in the dimensional table component availability.

ACCESSORIES
Tables and carriages
Standard table and carriages for C-, DC- and LM-systems incorporate a black anodised aluminium plate fitted with guide rollers.

Wipers
Standard wipers NAID for C-, DC-rails are made from NBR compound moulded on a steel plate.

Lubricators
Are composed by two main parts: a plastic box with the same shape profile of the rail, and a lubricated felt; the felt is slightly pressed on the raceways by a spring. The plastic box, that drags the raceways, works as a wiper, and removes dust and shavings.

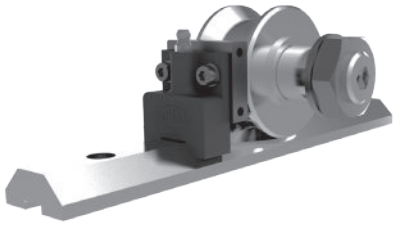

The plastic box can be mounted directly on the guide rollers plate by the appropriate aluminium plate included in the kit. In the lubricators for guide rollers size 52 or higher, the grease nipple allows an easy connection with a re-lubrication system. For the lubrication of the rails you can use one lubricator only on each raceway; in order to wipe the raceways it is better to mount two lubricators, before and after the carriage. The lubricators are supplied with the felt already lubricated.

USE IN DIRTY ENVIRONMENT
Due to the design cam rollers with profile are especially adapted to the use in rough and dirty environment. This property has proved true in many applications such as welding plants, steel and grinding machines and is superior to recirculating ball bearing guides in continuous operation.

LUBRICATION
BEARING LUBRICATION
All the guide rollers, except for the FRN ... EI, based on needle bearings, are equipped with long life lubricated bearings. This means that the grease inside the bearing is enough for the entire life of the roller guide. The roller guide type FRN ... EI, with needle bearings, accommodates the re-lubrication of the bearings.

Rail lubrication
Rails must be lubricated. This allows to reduce the friction, to reach the calculated lifetime of the system and to work at high speed. No or insufficient lubrication will cause rapid deterioration. The typical signal of tribocorrosion is the presence of a red / dark oxide and rapid wearing of the rail and guide rollers. The lubrication of the rail, the working environment and the load must be considered all together for a correct estimation of the lifetime of the guide system.

Generally speaking, for application with low duty frequency, a periodic re-lubrication with a grease or with a viscous oil will sufficiently maintain the lubrication film. The re-lubrication interval depends on the application and must always be tested in the real working conditions. In a system with ground rails and short stroke without lubricators, you can consider a re-lubrication interval every 100,000 cycles. Increasing the load, speed or stroke, or using an undersized bearing will increase lubrication demand and result in a shorter lubrication interval. For a constant lubrication we suggest the use of felt lubricators to ensure a constant layer of lubricant between guide rollers and raceways. Felt lubricators enlarge the lubrication interval more than ten times.

The recommended lubricants are greases and oil for bearings, linear rails or chains, with a high viscosity of the basic oil and with EP additives, in order to separate the metallic surfaces even with low speed.

ASSEMBLY INSTRUCTIONS

GUIDE ROLLERS

The eccentric guide rollers allow the preload or clearance of the carriage to be adjusted independently of the guide roller mounting hole positioning tolerance or the distance between the rails. Recommended mounting hole tolerance is H7. When adjusting the eccentric guide roller care has to be taken to avoid excessive preload. Excessive preload can reduce the life of the linear system. Set the preload turning the guide roller counterclockwise so that any movement caused by vibration will cause the nut to be tightened. Ensure the preload is not increased when tightening the nut.

A simple way of setting a roller preload is as follows:

- Move the slider on the guide, holding the roller being adjusted with two fingers to prevent it from rotating
- Increase the preload by means of the wrench
- Repeat step 1 making sure the roller slides without rolling
- When it is no longer possible to prevent roller rolling, slightly decrease the preload and fully tighten the lock nut, thereby setting the position of the eccentric.

GUIDES

For single guide rail type FS, FWS, LS, DC, FWN and LM no special assembly instructions are necessary. For multiple parallel rails parallelism has to be checked to avoid guide rollers overload or excessive carriage play. When constant preload is required parallelism error has to be lower that 0.050 mm.
Connection between the rail and the mounting surface has to be§designed accordingly with the operating condition to ensure proper product positioning and functionality. The direction and intensity of the load, the number and strength of the screws, the geometry of mounting surfaces, use of pins or wedges have to be evaluated to fully utilize the linear guide load capacity.

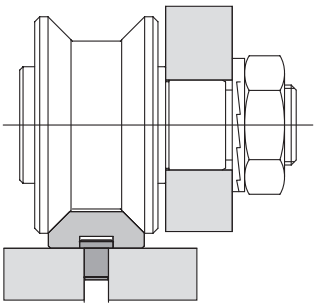

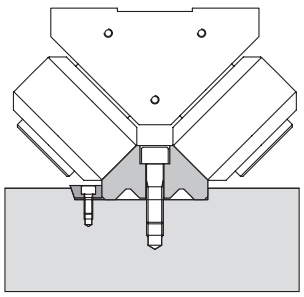

CARRIAGES

Carriages are supplied with concentric guide rollers nut tightened already. Eccentric guide rollers have to be set and tightened during final assembly operation by customer.

CALCULATION PROCEDURE

Calculation is carried out in two steps, first defining the forces on the most heavily loaded roller and then estimating the safety factors and life.

CALCULATING THE LOADS ON THE GUIDE ROLLERS

In the case of complex load situations, with forces acting in different directions, calculating the reactions on the rollers is difficult and hard to simplify. In the event of the applied load having a direction parallel to one of the co-ordinate axes, the radial Pr and axial Pa components of the reactions on the most loaded roller can be obtained using elementary formulas. With reference to the diagrams shown, we obtain the load components on the rollers relevant for checking and calculating the life, applying the following methods.

Angle α in the formulas is half the groove angle. Look in the dimensional table notes for the correct value.

Distance l_c is the effective contact distance. With the exception of Rolbloc system the correct value is calculated as the guide roller centre distance across the rail plus or minus the outer guide roller diameter De, depending if the guide is outside or between the rollers.

Guides between the rollers

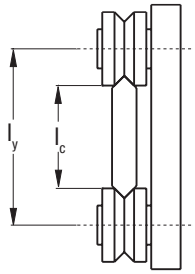

$l_c = l_y - De$

Guides outside the rollers

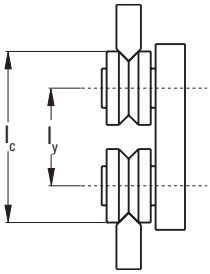

$l_c = l_y + De$

In case of Rolbloc the distance l_c is the distance between the rails basis.

Diagram a)

Load F applied parallel to axis Y

Guide between the rollers

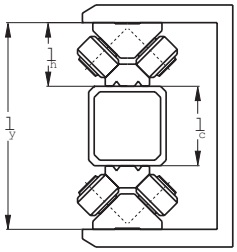

$l_c = l_y + 2\,l_h$

Guides outside the rollers

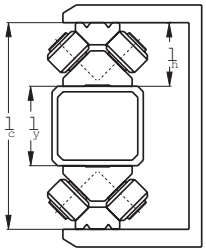

$l_c = l_y + 2\,l_h$

a)

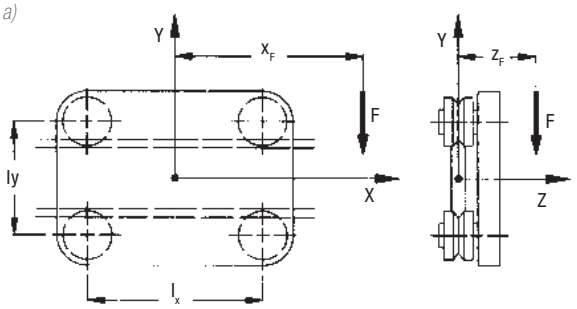

$$P_a = \frac{F \cdot z_F}{2 \cdot l_C}$$

$$P_r = \frac{F \cdot (l_x + 2 \cdot x_F)}{2 \cdot l_X} + \frac{F \cdot z_F \cdot \tan \alpha}{2 \cdot l_C}$$

Diagram c)
Load F applied parallel to axis X

b)

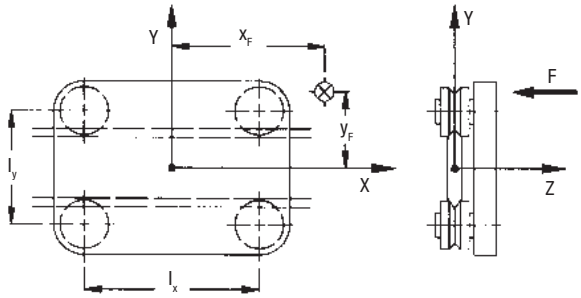

$$P_a = \frac{F}{4} + \frac{F \cdot x_F}{2 \cdot l_x} + \frac{F \cdot y_F}{2 \cdot l_C}$$

$$P_r = P_a \cdot \tan \alpha$$

Diagramma c)
Carico F applicato parallelo all'asse X

c)

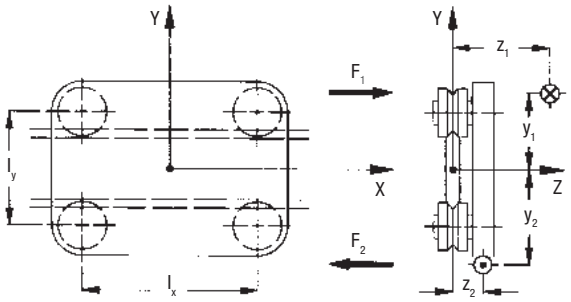

In this case the external load F_1, applied at the point of coordinate y1 z1, should be considered together with reaction $F_2 = -F_1$ applied at the point of co-ordinate y_2 z_2.

Calling Δ_y the absolute value of y_2-y_1 and Δ_z the absolute value of z_2-z_1, the following formula is used:

$$P_a = \frac{F_1 \cdot \Delta_z}{2 \cdot l_X}$$

$$P_r = \frac{F_1}{l_X} \cdot \left(\frac{\Delta_z \cdot \tan \alpha}{2} + \Delta_y \right)$$

GUIDE ROLLER CALCULATION

In the table for each roller the following data is specified:

- C_w basic dynamic load, it is the radial load (N) that applied to the guide roller gives 100 km nominal life.
- F_r limit radial load, it is the maximum radial load (N) that can be applied on the guide roller; guide roller considering the strength of the stud.
- F_a limit axial load, it is the maximum axial load (N) that can be applied on the guide roller; guide roller considering the strength of the stud.
- X and Y coefficients to define the equivalent load for bearing life.
- α is the contact angle dependent on the guide roller type.

Rollers FRN ... EI work as combined bearings, the basic dynamic load is defined as:

- C_{wr} basic radial dynamic load, it is the radial load (N) that applied to the guide roller gives 100 km nominal life.
- C_{wa} basic axial dynamic load, it is the axial load (N) that applied to the guide roller gives 100 km nominal life.

Note: ISO 281 states 'the nominal life will be exceeded by 90 % of bearings before the first sign of material fatigue'.

NOMINAL LIFE CALCULATION

System life is the minimum life of either the bearings in the guide roller or the rail / roller contact surfaces.

For the rail / roller surface see the lubrication paragraph. For the bearings' life proceed as follows.

The loads Pr and Pa are calculated for ideal condition. However, in practice, because of the structure and operating conditions a better calculation and life estimation is performed using overload factor f_w as follows:

1.0 – 1.2	Smooth operation at low speed at constant load without shocks
1.2 – 1.5	Smooth operation with load variation
1.5 – 2.0	Operation with small shocks and vibrations
2.0 – 4.0	High acceleration, shocks and vibrations

Once P_a and P_r have been defined we can proceed to calculate the equivalent load P_{eq} (not for FRN ... EI).

$$P_{eq} = X \cdot P_R + Y \cdot P_a \qquad \text{(N)}$$

Coefficients X and Y can be obtained from guide roller tables (in the case of tapered bearings according to the ratio between P_a e P_r). In

case of pure radial guide roller as PK and GC or floating bearings FRL, RAL, RKXL, RKUL.

$$P_{eq} = P_r \qquad \text{(N)}$$

Nominal bearing life:

$$L_{10} = 100 \cdot \left(\frac{C_w}{P_{eq} \cdot f_w} \right)^p \qquad \text{(km)}$$

Where coefficient p is:

- p = 3 for ball bearing guide rollers (FR ... EU, RCL ..., PFV ..., RAL)
- p = 10/3 for roller bearing guide rollers (PK ..., RKY, RKX, Rolbloc, GC ...)

In case of guide rollers based on needle bearings type FRN ... EI nominal bearing life is calculated as the minimum between:

$$L_{10} = 100 \cdot \left(\frac{C_{wr}}{P_r \cdot f_w} \right)^{10/3} \qquad \text{(km)}$$

and

$$L_{10} = 100 \cdot \left(\frac{C_{wa}}{P_a \cdot f_w} \right)^{10/3} \qquad \text{(km)}$$

CHECKING THE GUIDE ROLLER MAX. LOAD

The values of the radial limit loads F_r and axial limit loads F_a shown in the catalogue refer to extreme operating conditions, meaning:

- $P_a = 0$ (pure radial load)
- $P_r = P_a \cdot \tan \alpha$ (maximum axial load)

In intermediate cases, when the ratio is included between the extreme values, the equivalent limit load F_k to be considered must be calculated according to ratio $k = P_a / P_r$.

$$F_k = \frac{F_r \cdot F_a}{k \cdot F_r + (1 - k \tan \alpha) \cdot F_a} \qquad \text{(N)}$$

To check the strength of the guide roller, in relation to the limit load, the safety factor has to be greater than 1.

$$F_k / P_r > 1$$

Note: in the following common cases it is not necessary to calculate Fk and the evaluation can be completed easily. Rollers that allow axial movement (FRL, PK, RKYL, RKUL, GC) don't support axial loads.

In case of loads acting in the guide roller plane (F_x o F_y acting with Z=0) the axial load is also zero (0) (see calculation example n° 3). In these cases it has to be:

$$F_r / P_r > 1$$

In case of load F_z acting perpendicular to guide roller plane the axial load is maximum (see calculation example n°4).

$$F_a / P_a > 1$$

EXAMPLES OF CALCULATION

EXAMPLE N° 1:

A FORK-LIFT TRUCK FEATURING VERTICAL MOVEMENT

The resulting magnitude of the weight passes through point (1), while the vertical force that balances this, for instance the traction of a timing belt, passes through point (2).

Guide rollers type RKY 52 are used with guide rail type FS 62 MT:

overload factor $f_w = 1{,}0$

center distance $l_x = 300$ mm, $l_y = 144.3$ mm

$F = 1800$ N

$z_1 = 100$ mm, $z_2 = -250$ mm

$y_1 = -150$ mm, $y_2 = 350$ mm

$\Delta_z = 350$ mm, $\Delta_y = 500$ mm

Scheme 1:

Load on rollers

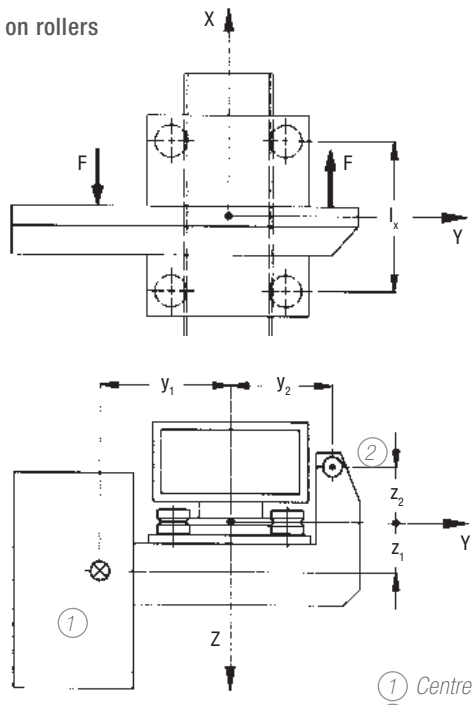

(1) *Centre of gravity*
(2) *Force passing through point*

$$P_a = \frac{1800 \cdot 350}{2 \cdot 300} = 1050 \text{ N}$$

$$P_r = \frac{1800}{300} \cdot \left(\frac{350 \cdot \tan 40°}{2} + 500 \right) = 3881 \text{ N}$$

Nominal life

X = 1

Y = 3.38

Equivalent dynamic load

$$P_{eq} = 1 \cdot 3881 + 3.7 \cdot 1050 = 7766 \text{ N}$$

$$L_{10} = 100 \cdot \left(\frac{41000}{7766 \cdot 1} \right)^{10/3} = 25622{,}5 \text{ km}$$

Limit load check

Equivalent limit load F_k

$K = P_a / P_r = 0.27$

$$F_k = \frac{11900 \cdot 4250}{0.27 \cdot 11900 + (1 - 0.27 \cdot \tan 40) \cdot 4800} = 8248 \text{ N}$$

Guide roller safety coefficient

$$F_k / P_r = 8248 / 3881 = 2{,}1$$

EXAMPLE N° 2:

THE HORIZONTAL AXIS OF A MANIPULATOR IN STEEL INDUSTRY

The centre of gravity of the vertical axis and load is placed in the middle of the horizontal centre-axis lx and 160 mm distance from the guide axis. The dirty environment and the possibility of shocks lead to the choice of Rolbloc system.

Scheme 2:

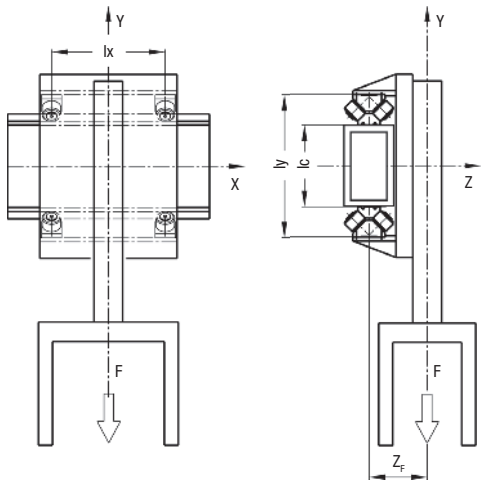

Guide rollers BL 252 are used with guide GU 62 M:

Overload factor $f_w = 1.4$

Centre distance $l_x = 350$ mm

$l_y = 400$ mm

F = 6000 N

x = 0

y = –1000 mm

z_F = 160 mm

Load on rollers

The effective center axis l_c is 400 – 85 – 85 = 230 mm

$$P_a = \frac{6000 \cdot 160}{2 \cdot 230} = 2087 \text{ N}$$

$$P_r = \frac{6000 \cdot (350 + 0)}{2 \cdot 350} + \frac{6000 \cdot 160 \cdot \tan 45}{2 \cdot 230} = 5087 \text{ N}$$

Nominal life

From the Rolbloc table

X = 1

Y = 1

$$P_{eq} = 1 \cdot 2087 + 1 \cdot 5087 = 7174 \text{ N}$$

$$L_{10} = 100 \cdot \left(\frac{59000}{7174 \cdot 1.4} \right)^{10/3} = 36577 \text{ km}$$

Limit load check

$K = P_a / P_r = 2087 / 5087 = 0.41$

$$F_k = \frac{16800 \cdot 8400}{0.41 \cdot 16800 + (1 - 0.41 \cdot \tan 45) \cdot 8400} = 11915 \text{ N}$$

$$F_k / P_r = 11915 / 5087 = 2.3$$

EXAMPLE N° 3:

THE SLIDING DOOR OF A MACHINE TOOL (RAIL ON TOP)

The door is supported by the rail DC type on the upper edge and driven on bottom side by an auto-aligning carriage C3 RAL on LM guide rail type. Because of the effect of the bottom rail there isn't any torque applied at the DC rail. The door weight acts in a plane coincident with the roller / rail vertical axis and as such there is no overturning moment. In this case, limit load calculation can be easily carried out from basic data F_r without F_k calculation. Of course the calculation is always the same.

Scheme 3:

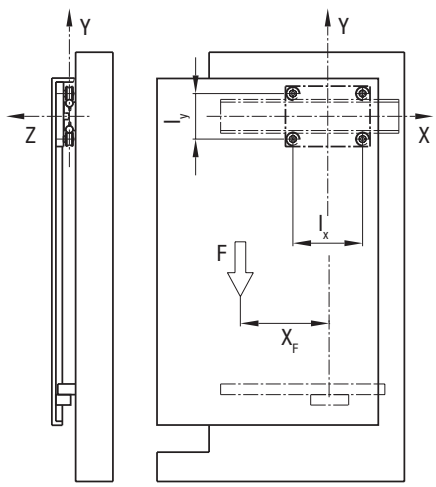

Guide rail DC 18.65 is used with carriage T4 PFV 3518 250:

Overload factor $f_w = 1.1$
Centre distance $l_x = 213$ mm
$l_y = 113$ mm

F = 450 N
x = –300 mm
y = –500 mm
z = 0 mm (because of LM rail)

Load on rollers

The effective center axis l_c is 450 + 32 = 482 mm

$$P_a = \frac{450 \cdot 0}{2 \cdot 78} = 0 \text{ N}$$

$$P_r = \frac{450 \cdot (213 + 2 \cdot 300)}{2 \cdot 213} + \frac{450 \cdot 0 \cdot \tan 40}{2 \cdot 213} = 859 \text{ N}$$

Nominal life

$$L_{10} = 100 \cdot \left(\frac{4550}{859 \cdot 1.1}\right)^3 = 11150 \text{ km}$$

Limit load check

$$F_r / P_r = 1500 / 859 = 1.7$$

EXAMPLE N° 4:
TRANSFER UNIT

The box weight loads the carriage with max. axial load. In this load configuration the limit load check calculation can be easily done directly by the F_a value without F_k calculation.

Scheme 4:

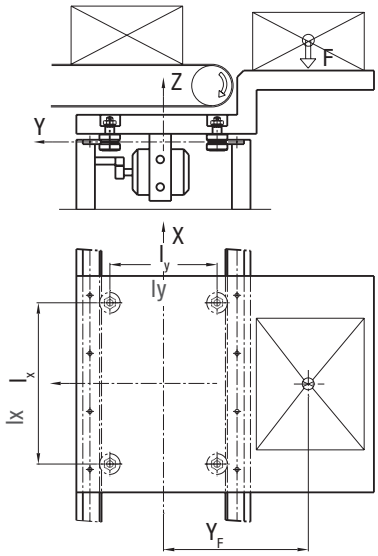

Guide rollers FRN(R) 32 EI with rails FSH 32 M

Overload factor $f_w = 1.2$
Centre distance $l_x = 670$ mm
$l_y = 450$ mm

F = 400 N
x = 0 mm
y = 650 mm
z = 50 mm

Load on rollers

The effective center axis l_c is 450 + 32 = 482 mm

$$P_a = \frac{400}{4} + \frac{400 \cdot 650}{2 \cdot 482} = 370 \text{ N}$$

$$P_r = 370 \cdot \tan 40 = 310 \text{ N}$$

Nominal Life

$$L_{10r} = 100 \cdot \left(\frac{5600}{310 \cdot 1.2}\right)^{10/3} = 840000 \text{ km}$$

$$L_{10a} = 100 \cdot \left(\frac{2100}{370 \cdot 1.2}\right)^{10/3} = 177600 \text{ km}$$

L10 = 17760 km

Limit load check

$$F_a / P_a = 950 / 370 = 2.5$$

For further details, contact the NADELLA Technical Service.

ORDERING KEY

STEEL RAIL

ORDER CODE

FSH 62 MT 1500 SB NW RR

Profile type
GU
FS
FSH
FSX
GP
NT
LS

Profile size

Type di guide
M: Ground
MT: Cold drawn and sandblasted

Length (mm)

OPTIONAL FEATURES
DP: Pin holes
1R: One end ground on the first hole side
2R: One end ground on the last hole side
RR: Both ends ground

OPTIONAL FEATURES
NX: Stainless steel
NW: Nickel plating
GZ: Galvanized

OPTIONAL FEATURES
NZ: Finished to drawing
NF: Without holes
SA: Boring layout A (only GP, NT and LS range)
SB: Boring layout B (only GP, NT and LS range)

ALLUMINIUM RAIL

ORDER CODE

FWS 40 / 2000 NF NX RR

Profile type
FWN
FWS
FWH
C
DC
LM
LML

Profile size

Length (mm)

OPTIONAL FEATURES
DP: Pin holes
1R: One end ground on the first hole side
2R: One end ground on the last hole side
RR: Both ends ground

OPTIONAL FEATURES
NX: Stainless steel rods
CH: Chromium plated

OPTIONAL FEATURES
SB: Standard drilling
NZ: Finished to drawing
NF: Without holes
1G: Pin based shaft connection on the first hole side
2G: Pin based shaft connection on the last hole side
3G: Pin based shaft connection on both sides

PRODUCT INDEX (IN ALPHABETIC ORDER)

PRODUCT	DESCRIPTION	PAGE
BL	Carriage with burnished steel body for the Rolbloc system	40
BL ... DS	Carriage BL with discharge system block	41
C	Rail composed by an aluminium body and one shaft in steel, with a single raceway for Base-Line system	106
C3 RAL C4 RAL	Carriages with body in anodised aluminium with 3 or 4 guide rollers type RAL for auto-aligning system U-Line	138 139
C3 RAS	Carriage with body in anodised aluminium with 3, 4 or 5 guide rollers type RAS for auto-aligning system C-Line	90
C3 RCL C4 RCL	Carriage with body in anodised aluminium with 3 or 4 guide rollers type RCL for U-Line system	138 139
C3 RCL16 NX C4 RCL16 NX	Carriages with 3, 4 anti-corrosion rollers covered in plastic for guides LML 20 for C-Line system	143
C3 RCS	Carriages with body in brunished steel with 3 guide rollers type RCS for auto-aligning system C-Line	90
C3 RYL C4 RYL	Carriage with body in anodised aluminium with 3 or 4 guide rollers type RCL and RAL for auto-aligning system U-Line	138 139
C3 RT C4 RT C5 RT C6 RT	Carriages with body in brunished steel 3,4,5, 6 and 6 RT and RTL guide rollers for NT guide of the auto-aligning C-Line	90 91 92 93
C3 RTL C4 RTL C5 RTL C6 RTL	Carriages with body in brunished steel 3,4,5, 6 and 6 RT and RTL guide rollers for NT guide of the auto-aligning C-Line	90 91 92 93
C3 RTY C4 RTY C5 RTY C6 RTY	Carriages with body in brunished steel 3,4,5, 6 and 6 RT and RTL guide rollers for NT guide of the auto-aligning C-Line	90 91 92 93
DC	Rail composed by an aluminium body and two shafts in steel, with two raceways for Base-Line system	105
DIST FS	Spacers for rails FS, FSH and FSR	61
FG FGU	Guide rollers with needle roller bearings (FGU), for GP guides	30
FK	Guide roller with tapered roller bearings for GP rails of Heavy-Line system	27
FKU	Guide roller with tapered roller bearings for GU rails of Heavy-Line system	20
FKX	Guide roller with tapered roller bearings for FSX rails of V-Line system	58
FKY	Guide roller with tapered roller bearings for FS and FSH rails of V-Line system	58
FR ... EU	Guide roller with ball bearings for FS and FSH rails of V-Line system, and FWS and FWH rails of Base-Line system	54 116
FR ... EU AS / AZ	Floating guide rollers with ball bearings for FS and FSH rails of V-Line system, and FWS and FWH rails of Base-Line system	55 117
FRL ... EU	Floating guide rollers with needle roller bearings for FS and FSH rails of V-Line system, and FWS and FWH rails of Base-Line system	59
FRN ... EI	Guide roller with needle roller bearings for FS and FSH rails of V-Line system	56
FS ... M FSH ... M	Rail in steel with ground raceways, for V-Line system	49 67
FS ... MT FSH ... MT	Rail in steel with sandblasted raceways, for V-Line system	48 50
FSHZ-FSXZ	Guide rail with integrated rack transmission	52
FSR ... M	Circular rail in steel, for Multi-Motion-Line system	73
FSRO	Oval circuit composed of linear and circular pieces of rail for Multi-Motion-Line system	75
FSRQ	Ring circuit composed of linear and circular pieces of rail for Multi-Motion-Line system	76

PRODUCT	DESCRIPTION	PAGE
FSX ... M	Rail in steel with ground raceways, for V-Line system	51
FSX ... MT	Rail in steel with sandblasted raceways, for V-Line system	50
FWH	Rail composed by an aluminium body and one shaft in steel, with a single raceway for Base-Line system	115
FWN	Rail composed by an aluminium body and two shafts in steel, with two raceways for Flexi-Line 645 system	125
FWS	Rail composed by an aluminium body and two shafts in steel, with two raceways for Base-Line system	114
GC..SW	Guide roller with needle roller bearings for GP rails of Heavy-Line system	28
GLA	Guide roller with double row of balls with oblique contact, with “gothic arch” profile for U-Line system	137
GP ... M	Rail in steel, ground raceways for Heavy-Line system	24
GU ... M	Rail in steel, ground raceways for Heavy-Line and Rolbloc system	39/18
GU ... MT	Rail in steel, sandblasted raceways for Heavy-Line and Rolbloc system	39/18
LM	Rail composed by an aluminium body and two shafts in steel, with two internal raceways for U-line system	134
LML	Rail totally in aluminium with two internal raceways for U-line system	142
LS	Rails totally in steel with internal hardened raceways for C-Line system	90
LUBC	Lubricator for Base-Line system (guide rollers running on C and DC rails)	113
LUBL	Lubricator for Rolbloc	43
LUBM	Lubricator for U-Line system (carriages running in LM rails)	141
LUBR	Lubricator system for circular rails	79
LUBP	Lubricator for Heavy-Line system (guide rollers running on GP rails)	32
LUBU	Lubricator for Heavy-Line system (guide rollers running on GU rails)	22
LUBX, LUBY	Lubricator for V-Line system (guide rollers running on FS and FSH rails)	63
LUBZ	Lubrication wheel	63
NAID	Wipers for C and DC rails of Base-Line system	112
NT	Rails totally in steel with internal hardened raceways with V-profile for C-Line system	
PFV gothic profile	Guide roller with “gothic arch” profile, based on ball bearings, for C and DC rails of Base-Line system, and LM rails of U-Line system	107 135
PFV	Guide roller based on ball bearings, for C and DC rails of Base-Line system, and LM rails of U-Line system	108
PK	Guide roller with tapered roller bearings for GP rails of Heavy-Line system	26
PR	Adjustment plates for BL carriages of Rolbloc system	42
PZ	Pinion for FSHZ-FSXZ guide rail	62
RAL	Floating guide rollers with “gothic arch” profile, with a double row of balls with oblique contact, for LM rails of U-Line system	136
RAS	Floating guide rollers with balls for LS rails of C-Line system	92
RCL	Guide rollers with “gothic arch” profile, with a double row of balls with oblique contact, for LM rails of U-Line system	135
RCP	Guide rollers with “gothic arch” profile, with a double row of balls with oblique contact, for LM rails of U-Line system	135
RCS	Guide rollers with balls profile, for LS rails of C-Line system	91
RKO	Guide rollers with tapered roller bearings, with “gothic arch” profile for C and DC rails of Base-Line system	110
RKU	Guide rollers with tapered roller bearings, for GU rails of Heavy-Line system	19
RKUL	Floating guide rollers with tapared roller bearings for GU rails of heavy line system	21
RKX	Guide rollers with tapered roller bearings, for FSX rails of V-Line system	57
RKY	Guide rollers with tapered roller bearings, for FS and FSH rails of V-Line system	57
RKYL RKXL	Floating guide rollers with tapered roller bearings for FS ... rails of V-Line system	60
RPT	Wipers for Rolbloc BL carriages	43
SAG	Guide pins for the mounting alignment of GU rails of Heavy-Line system	23
TA4 / TB4	Carriages with anodised aluminium body with four guide rollers type GLA for FWN rails of Flexi-Line system	126
T4 FR	Carriages with anodised aluminium body with four guide rollers type FR ... EI for FWS rails Base-Line system	119

PRODUCT	DESCRIPTION	PAGE
T4 PFV	Carriages with anodised aluminium body with four guide rollers type PFV with “gothic arch” profile for C and DC rails of Base-Line system, and LM rails of U-Line system	111 140
T4 R …	Carriages with fixed guide rollers Steering carriage for FSR … M circular rails of Multi-Motion-Line system	77 78
T4 RAL	Carriages with black anodised aluminium body with four floating guide rollers type RAL with “gothic arch” profile for LM rails of U-Line system	140
T4 RCL T4 RCP	Carriages with black anodised aluminium body with four guide rollers type RCL or RCP with “gothic arch” profile for LM rails of U-Line system	140
T4 RYL	Carriages with black anodised aluminium body with four guide rollers type RCL / RCP and RAL with “gothic arch” profile for LM rails of U-Line system	140

SUFFIX INDEX (IN ALPHABETIC ORDER)

SA	Standard hole pattern according to the catalogue
AC	Hollow shafts optional for rails C, DC and LM
SB	Standard hole pattern according to the catalogue
CH	Chromium plated shafts
D	Felt without lubricant
DP	Pin holes
EE	Synthetic sealer for GC
EEM	Ground profile
G	Pin based shaft connection
GZ	Surface zinc-plated for LS rails (C-Line)
M	Ground profile
MC	Rough ground profile (for GP rails)
MM	Metallic sealer for FGU
MT	Sandblasted profile
NF	Rails without holes
NX	Stainless steel version for guide rollers or guide rails
NW	Chemical nickel-plating
NZ	Finishes to drawing
1R	One end ground on the first hole side
2R	One end ground on the last hole side
RR	Both ends ground
S	Holes for DC guide
UU	Felts for lubrication available (for carriages TA4 and TB4 of Flexi-Line 645 system)
V	Seals in Viton

beyond motion

The content of this document and its use are subject to the general terms of sale of ROLLON available on the web site www.rollon.com