NADELLA ROLLON BY TIMKEN

# MULTI-MOTION LINE

Data sheet - rev. 1.0



LINEAR COMPONENTS

# myRollon

MyRollon is **your digital working platform** for linear guides, telescopic slides, actuators and actuator systems.

With myRollon, it is possible to determine the best linear motion solution according to your application specifications.

**SCAN ME!**

# Index

Features and advantages ..... 4
Circular rails FSR ... M ..... 5
Alignment blocks for FSR ..... 6
Oval circuit FSRO ..... 7
Ring circuit FSRQ ..... 8
Carriages with fixed guide rollers T4R ..... 9
Steering carriage T4R ..... 10
Lubrication system LUBR.. for circular systems ..... 11
Mounting examples ..... 12

## KEY BENEFITS

- Circular rails based on the profiles of V-Line (FS guides)
- Circular rails, oval circuits and ring circuits
- Rolled vertical guides for oversized radii
- Protection against corrosion by special surface treatment

NX

NADELLA proposes several circular rails based on the FS family of profiles. The rails can be used as an entire circumference, or single sectors, or joined together with straight pieces of rail in order to obtain oval or ring circuits.

## GUIDE

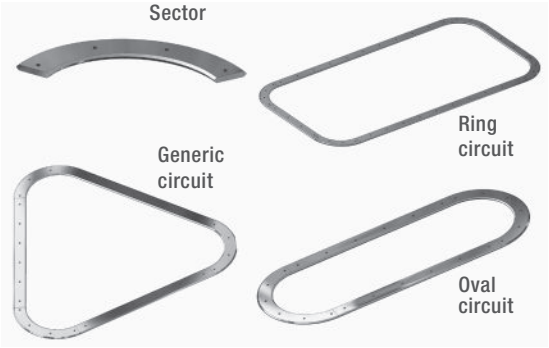


The rails are steel, induction hardened on the raceways, with the same section dimensions as straight FS ... M rails. In the circuits the rails are joined together with alignment blocks that allow easy precise mounting. All the pieces of the circuit are supplied appropriately marked in order to avoid mistakes during joining. For protection against corrosion NADELLA proposes nickel plating (option NW) for both straight and circular pieces. On request, guides can be supplied in stainless steel (NX option). In addition to the standard dimensions in the table it is possible to realize rings with different sections or radii in order to satisfy specific demands.

## GUIDE ROLLERS

Any guide rollers of the FS family of products can be used in combination with the circular rails.

## CARRIAGE

Carriages for circular rails can be realized with guide rollers in fixed position or mounted on steering arms.

## CARRIAGES WITH GUIDE ROLLERS IN FIXED POSITIONS

You can set up the distance between the centres of the guide rollers of a carriage with fixed guide rollers in order to obtain clearance-free running both on the straight and on the circular stretch of a circuit. The resulting carriage, normally a simple table with four holes for the housing of the guide rollers, will be simple and compact; there are however, some contraindications:

- In the passage from the straight stretch to the circular one (and vice versa), when two guide rollers are engaged on the straight portion and two on the circular one, there will be clearance between the carriage and the rail. The extent of the clearance depends on the dimensions of the rail, of the roller guides and of the carriage. Because of this clearance it is not possible to have an accurate positioning of the carriage during the passage between straight and circular stretch and therefore, in fast application, there will be vibration, noise and overload of the roller guides.
- This kind of carriages, with fixed guide rollers, can be used only for a single specific radius throughout the circuit. To use a carriage with fixed guide roller positions you can't have circular stretches with different radii.

To define the design for holes of the fixed rollers please contact the NADELLA Technical Service.

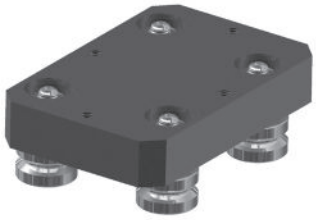

## STEERING CARRIAGES

The contraindications for the carriage with guide rollers in fixed positions can be resolved by using the steering carriage. Guide rollers are mounted in pairs on steering arms that are free to rotate in order to always be transversal to the rail in every point of the circuit. The carriage won't have clearance at any point in the circuit improving transition area accuracy and reduce running noise. The studs of the steering carriage are fitted with needle bearings and seals for lubricant retention and protection. The tightening of the stud is obtained by the full tightening of the nut, and guarantees the best locking.

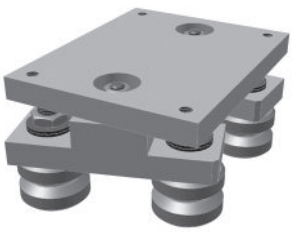

# CIRCULAR RAILS FSR ... M

Circular rail in steel.

Available in stainless steel version. NX

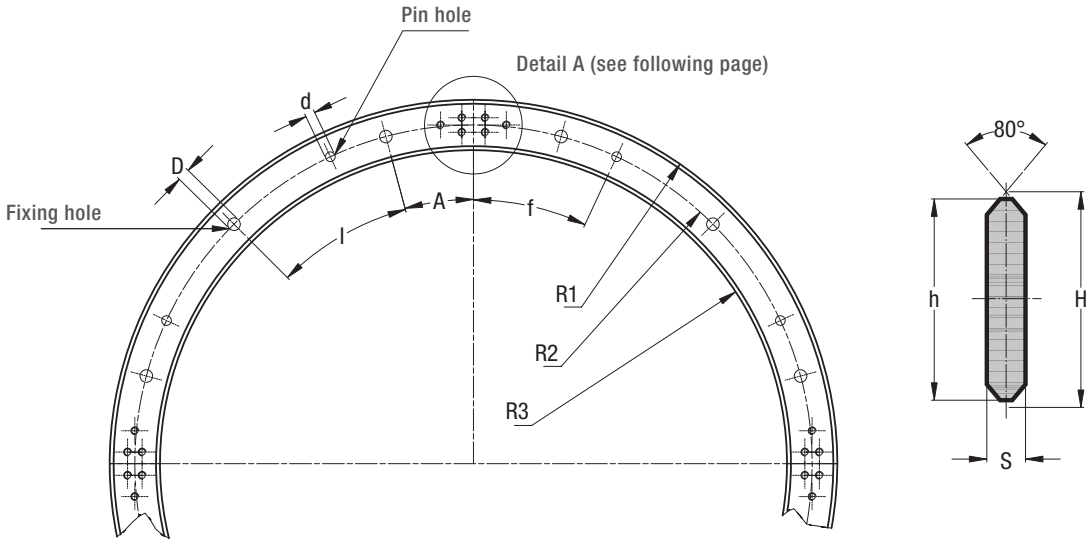


| Type | Dimensions (mm) | | | | | | | | | | | n° fixing holes / 360° | n° pin holes / 360° |
|---|---|---|---|---|---|---|---|---|---|---|---|---|---|
| | A | l | f | d H7 | D | R1 [1] | R2 [1] | R3 [1] | h | H | S | | |
| FSR 22 M 075 | 22.5° | 45° | 45° | 5 | 6.5 | 88 | 75 | 62 | 26 | 27.86 | 5 | 8 | 4 |
| FSR 22 M 125 | 15° | 30° | 25° | 5 | 6.5 | 138 | 125 | 112 | 26 | 27.86 | 5 | 12 | 8 |
| FSR 22 M 175 | 15° | 30° | 25° | 5 | 6.5 | 188 | 175 | 162 | 26 | 27.86 | 5 | 12 | 8 |
| FSR 35 M 225 | 11.25° | 22.5° | 7.5° | 8 | 9 | 248 | 225 | 202 | 46 | 47.86 | 8 | 16 | 8 |
| FSR 35 M 300 | 11.25° | 22.5° | 7.5° | 8 | 9 | 323 | 300 | 277 | 46 | 47.86 | 8 | 16 | 8 |
| FSR 47 M 400 | 9° | 18° | 18° | 10 | 11.5 | 438 | 400 | 362 | 76 | 78.58 | 10 | 20 | 8 |
| FSR 47 M 500 | 9° | 18° | 18° | 10 | 11.5 | 538 | 500 | 462 | 76 | 78.58 | 10 | 20 | 8 |

*1) R1, R2, R3 are radius*

## RAILS FINISHING

- Steel
- Induction hardened on the raceways

## HOLE LAYOUT

- Holes according to catalogue (SB)
- Finishes to drawing (NZ)

## OPTIONAL FEATURES

- Stainless steel (NX)
- Nickel plating (NW)
- Spacers for rails FS and FSH

*Example of standard designation: FSR 35 M 225 180*
*Circular rail sector FSR 35 M, radius R2 225 mm, sector angle 180°*

# ALIGNMENT BLOCKS FOR FSR

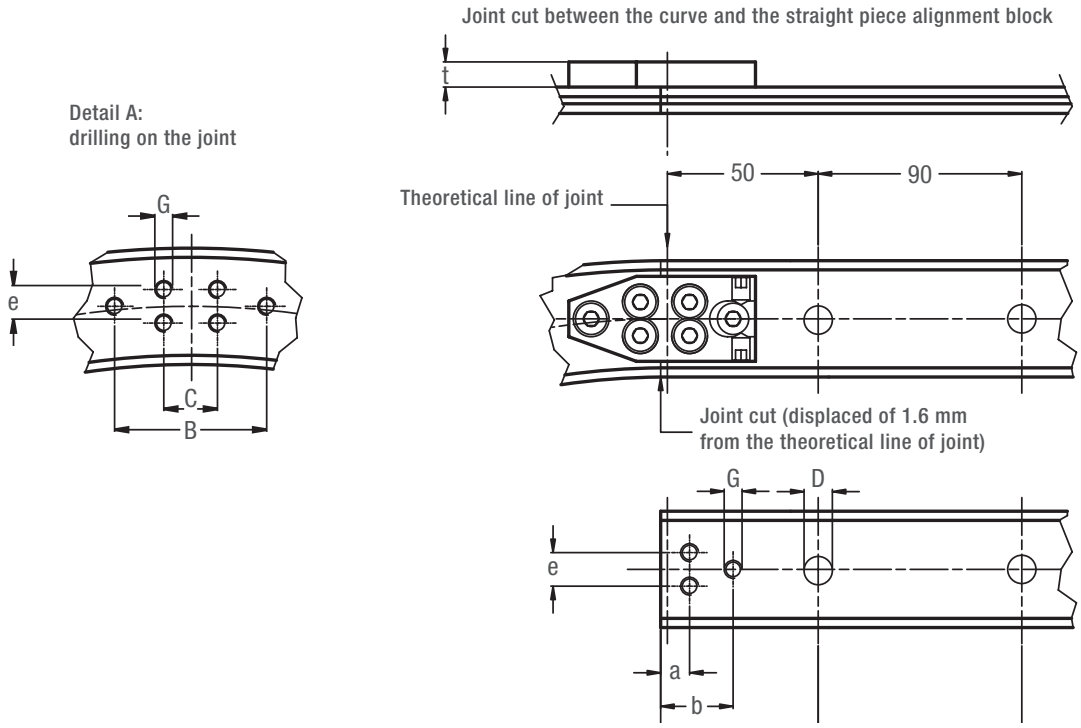


| Type | Dimensions (mm) | | | | | | | | Suggested combinations |
|---|---|---|---|---|---|---|---|---|---|
| | C | B | e | G | D | a | b | t | |
| FSR 22 M 075 | 12 | 34 | 7.5 | M4 | 6.5 | 7.6 | 18.6 | 5.8 | FR 22 EU, FRN 22 EI |
| FSR 22 M 125 | 12 | 34 | 7.5 | M4 | 6.5 | 7.6 | 18.6 | 5.8 | FR 22 EU, FRN 22 EI |
| FSR 22 M 175 | 12 | 34 | 7.5 | M4 | 6.5 | 7.6 | 18.6 | 5.8 | FR 22 EU, FRN 22 EI |
| FSR 35 M 225 | 18 | 38 | 20 | M6 | 9 | 10.6 | 19.6 | 8 | FR 32 EU, FRN 32 EI, FR 40 EU, FRN 40 EI |
| FSR 35 M 300 | 18 | 38 | 20 | M6 | 9 | 10.6 | 19.6 | 8 | FR 32 EU, FRN 32 EI, FR 40 EU, FRN 40 EI |
| FSR 47 M 400 | 18 | 58 | 43 | M6 | 11.5 | 8.6 | 18.1 | 9 | FR 40 EU, FRN 40 EI, FR 52 EU, RKY 52 |
| FSR 47 M 500 | 18 | 58 | 43 | M6 | 11.5 | 8.6 | 18.1 | 9 | FR 40 EU, FRN 40 EI, FR 52 EU, RKY 52 |

*The joint cut is displaced of 1.6 mm from the theoretical line of joint.*
*The alignment block allows an easy mounting of the joint.*

## SPACERS FOR FSR

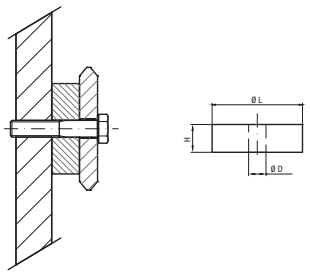

Spacers DIST FS can be used to mount the rails FSR (spacers for rails FS and FSH). See page 61

# OVAL CIRCUIT FSRO

Oval circuit composed of linear and circular pieces of rail.

Available in stainless steel version. NX

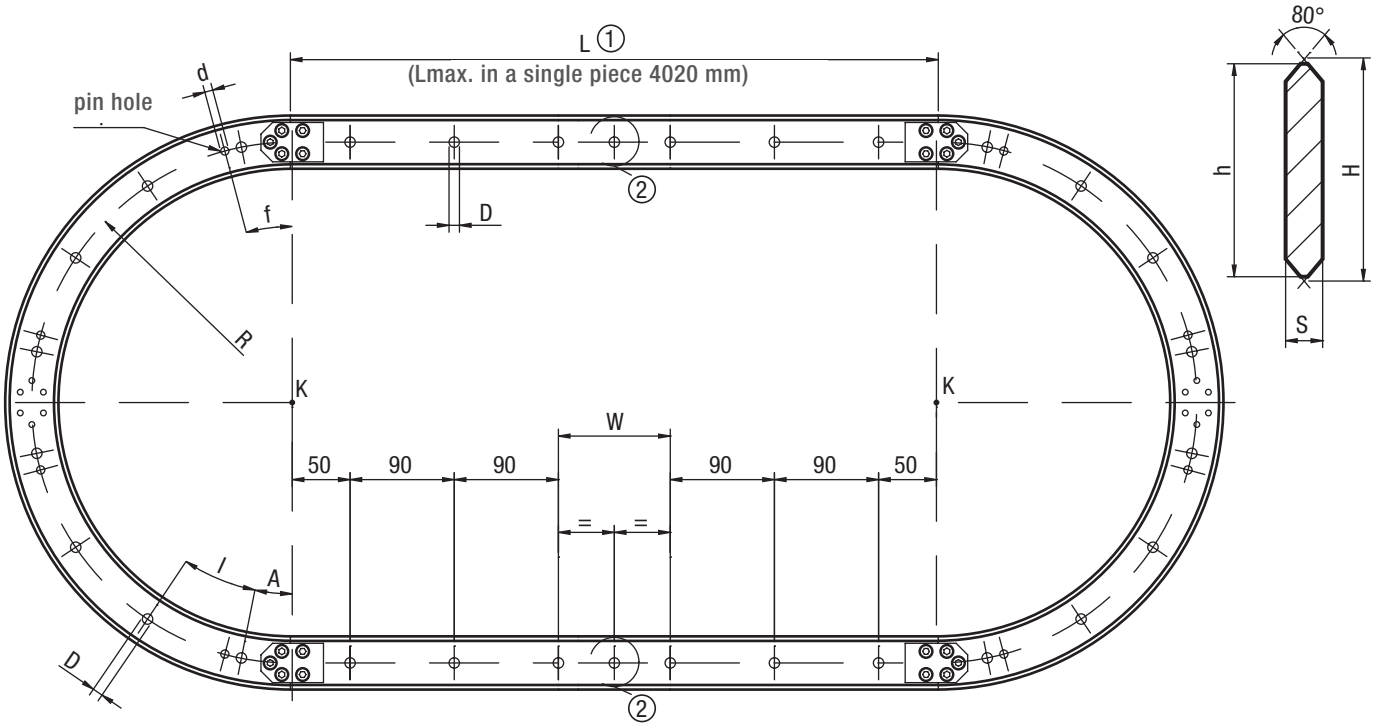


| Type | | | | Dimensions (mm) | | | | | |
|---|---|---|---|---|---|---|---|---|---|
| | A | I | f | Radius R | D | d H7 | S | h | H |
| FSRO 22 M 075 ... | 22.5° | 45° | 45° | 75 | 6.5 | 5 | 5 | 26 | 27.86 |
| FSRO 22 M 125 ... | 15° | 30° | 25° | 125 | 6.5 | 5 | 5 | 26 | 27.86 |
| FSRO 22 M 175 ... | 15° | 30° | 25° | 175 | 6.5 | 5 | 5 | 26 | 27.86 |
| FSRO 35 M 225 ... | 11.25° | 22.5° | 7.5° | 225 | 9 | 8 | 8 | 46 | 47.86 |
| FSRO 35 M 300 ... | 11.25° | 22.5° | 7.5° | 300 | 9 | 8 | 8 | 46 | 47.86 |
| FSRO 47M 400 ... | 9° | 18° | 18° | 400 | 11.5 | 10 | 10 | 76 | 78.58 |
| FSRO 47M 500 ... | 9° | 18° | 18° | 500 | 11.5 | 10 | 10 | 76 | 78.58 |

The oval circuit is composed by: two sectors of circular rails (180° with center in K) and two straight pieces of rails. The circuit is supplied complete of alignment blocks (with the proper screws), and all the pieces are marked in order to obtain the correct sequence during the mounting.

① The length of the straight pieces is higher than the distance between the centers K (1.6 mm x 2) in order to cover the thickness of rail lost during the cutting of the circular sectors.

## STANDARD HOLE LAYOUT (SB) FOR THE STRAIGHT RAILS

- First and last hole of 50 mm, starting from the centers K
- Hole pitch 90 mm
- Central hole ② only if the last hole pitch W is ≥ 120 mm
- The W pitch can not be less than 60 mm

## RAILS FINISHING

- Circular rail FSR ... M
- Guide rail FS ... M
- Aligment blocks for FSR

## HOLE LAYOUT

- Standard holes according to catalogue (SB)
- Finishes to drawing (NZ)

## OPTIONAL FEATURES

- Stainless steel (NX)
- Nickel plating (NW)

*Example of standard designation: FSRO 35 M 225 2000 SB*
*Oval circuit, size 35, radius 225 mm, distance between the centers K equal to 2000 mm ①, standard holes.*

# RING CIRCUIT FSRQ

Ring circuit composed of linear and circular pieces of rail.

Available in stainless steel version. NX

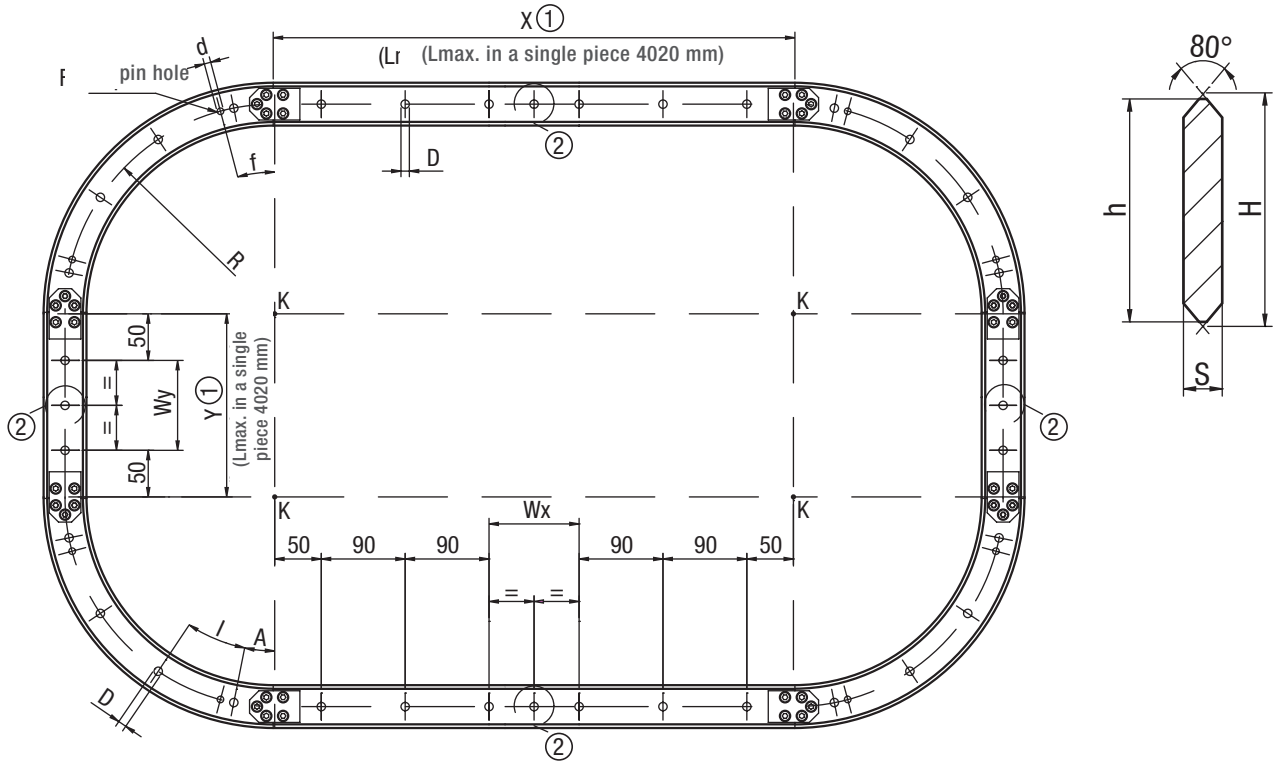


| Type | | | | Dimensions (mm) | | | | | |
|---|---|---|---|---|---|---|---|---|---|
| | A | I | f | Radius R | D | d H7 | S | h | H |
| FSRQ22 M 075 ... | 22.5° | 45° | 45° | 75 | 6.5 | 5 | 5 | 26 | 27.86 |
| FSRQ22 M 125 ... | 15° | 30° | 25° | 125 | 6.5 | 5 | 5 | 26 | 27.86 |
| FSRQ22 M 175 ... | 15° | 30° | 25° | 175 | 6.5 | 5 | 5 | 26 | 27.86 |
| FSRQ35 M 225 ... | 11.25° | 22.5° | 7.5° | 225 | 9 | 8 | 8 | 46 | 47.86 |
| FSRQ35 M 300 ... | 11.25° | 22.5° | 7.5° | 300 | 9 | 8 | 8 | 46 | 47.86 |
| FSRQ47 M 400 ... | 9° | 18° | 18° | 400 | 11.5 | 10 | 10 | 76 | 78.58 |
| FSRQ47 M 500 ... | 9° | 18° | 18° | 500 | 11.5 | 10 | 10 | 76 | 78.58 |

The ring circuit is composed by: four sectors of circular rails (90° with center in K) and four straight pieces of rails. The circuit is supplied complete of alignment blocks (with the proper screws), and all the pieces are marked in order to obtain the correct sequence during the mounting.

(1) The length of the straight pieces is higher than the distance between the centers K (1.6 mm x 2) in order to cover the thickness of rail lost during the cutting of the circular sectors

## STANDARD HOLE LAYOUT (SB) FOR THE STRAIGHT RAILS

- First and last hole at 50 mm, starting from the centers K
- Hole pitch 90 mm
- Central hole (2) only if the last hole pitch
  (Wx in horizontal and Wy in vertical) is ≥ 120 mm
  (Wx in horizontal and Wy in vertical) cannot be < 60 mm

## RAILS FINISHING

- Circular rail FSR ... M
- Guide rail FS ... M
- Aligment blocks for FSR

## HOLE LAYOUT

- Standard holes according to catalogue (SB)
- Finishes to drawing (NZ)

## OPTIONAL FEATURES

- Stainless steel (NX)
- Nickel plating (NW)

*Example of standard designation: FSRQ 35 M 225 2000 1000 / SB*
*Ring circuit, size 35, radius 225 mm, horizontal distance between the centers K equal to 2000 mm (1), vertical distance between the centers K equal to 1000 mm (1), standard holes.*

# CARRIAGES WITH FIXED GUIDE ROLLERS T4R ...

Available in stainless steel version. NX



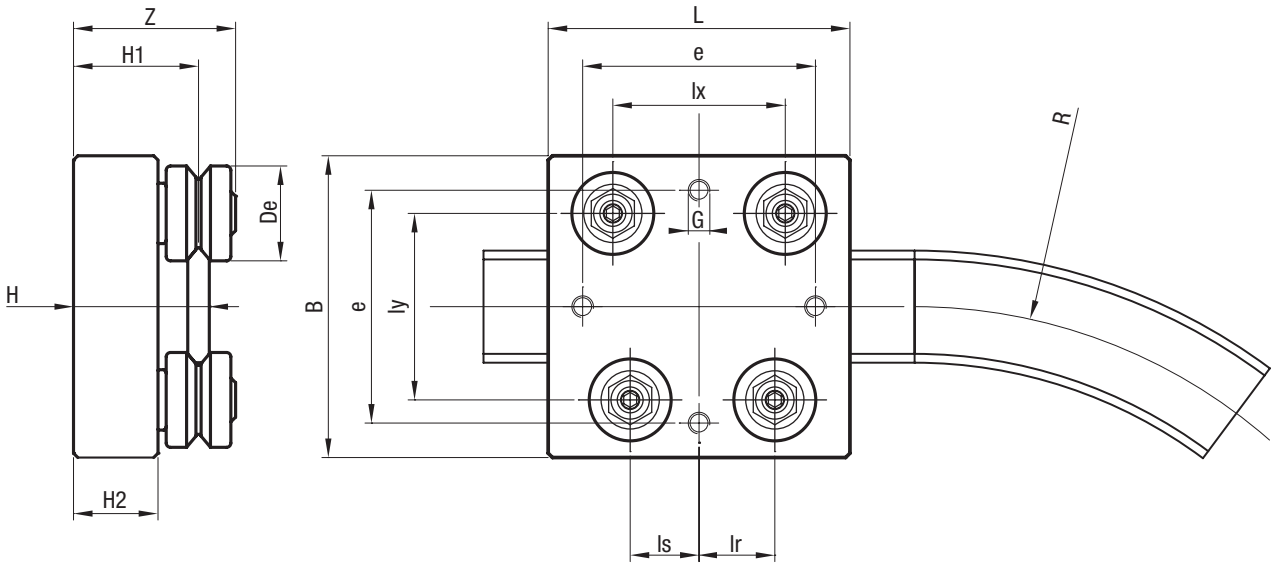


| Type | Dimensions (mm) | | | | | | | | | | | | | | Weight (kg) | Suggested combinations |
|---|---|---|---|---|---|---|---|---|---|---|---|---|---|---|---|---|
| | De | R | L | B | e | G | Ix | Is | Ir | Iy | H | H1 | H2 | Z | | |
| T4R 075 FR 22 EU | 22 | 75 | 70 | 70 | 54 | M5 | 40 | 14.3 | 15.3 | 43.3 | 31.5 | 29 | 19.6 | 38 | 0.40 | FSR ... 22 M 075 |
| T4R 125 FR 22 EU | 22 | 125 | 70 | 70 | 54 | M5 | 40 | 16.3 | 17.3 | 43.3 | 31.5 | 29 | 19.6 | 38 | 0.40 | FSR ... 22 M 125 |
| T4R 175 FR 22 EU | 22 | 175 | 70 | 70 | 54 | M5 | 40 | 17.2 | 18.2 | 43.3 | 31.5 | 29 | 19.6 | 38 | 0.40 | FSR ... 22 M 175 |
| T4R 225 FR 32 EU | 32 | 225 | 110 | 110 | 90 | M8 | 70 | 28.8 | 30.8 | 71.5 | 44 | 40 | 27.4 | 51 | 1.22 | FSR ... 35 M 225 |
| T4R 225 FR 40 EU | 40 | 225 | 120 | 120 | 100 | M8 | 75 | 30.5 | 32.5 | 77 | 49 | 45 | 29.5 | 60 | 1.90 | FSR ... 35 M 225 |
| T4R 300 FR 32 EU | 32 | 300 | 110 | 110 | 90 | M8 | 70 | 30 | 32 | 71.5 | 44 | 40 | 27.4 | 51 | 1.22 | FSR ... 35 M 300 |
| T4R 300 FR 40 EU | 40 | 300 | 120 | 120 | 100 | M8 | 75 | 31.9 | 33.9 | 77 | 49 | 45 | 29.5 | 60 | 1.90 | FSR ... 35 M 300 |
| T4R 400 FR 40 EU | 40 | 400 | 150 | 150 | 126 | M10 | 104 | 44.4 | 46.4 | 107.8 | 50 | 45 | 29.5 | 60 | 2.5 | FSR ... 47 M 400 |
| T4R 400 FR 52 EU | 52 | 400 | 180 | 180 | 156 | M10 | 110 | 46 | 49 | 116.8 | 59 | 54 | 34.2 | 71 | 4.7 | FSR ... 47 M 400 |
| T4R 400 RKY 52 | 52 | 400 | 180 | 180 | 156 | M10 | 110 | 46 | 49 | 116.8 | 59 | 54 | 34.2 | 76 | 5.1 | FSR ... 47 M 400 |
| T4R 500 FR 40 EU | 40 | 500 | 150 | 150 | 126 | M10 | 104 | 45.7 | 47.7 | 107.8 | 50 | 45 | 29.5 | 60 | 2.5 | FSR ... 47 M 500 |
| T4R 500 FR 52 EU | 52 | 500 | 180 | 180 | 156 | M10 | 110 | 47.4 | 50.4 | 116.8 | 59 | 54 | 34.2 | 71 | 4.7 | FSR ... 47 M 500 |
| T4R 500 RKY 52 | 52 | 500 | 180 | 180 | 156 | M10 | 110 | 47.4 | 50.4 | 116.8 | 59 | 54 | 34.2 | 76 | 5.1 | FSR ... 47 M 500 |

## OPTIONAL FEATURES

- Available with stainless steel guide rollers (NX)
- Carriages are complete with guide rollers

# STEERING CARRIAGE T4R ...

Steering carriage for FSR ... M circular rails



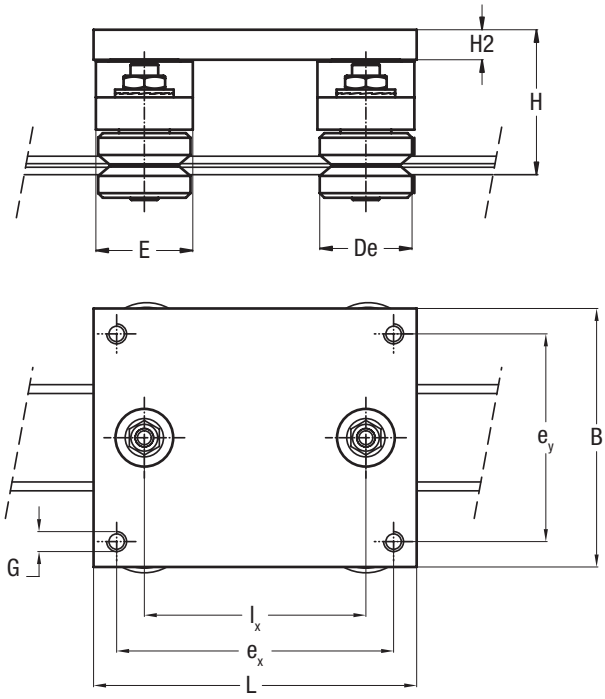


| Type | Dimensions (mm) | | | | | | | | | | | | | | Weight (kg) | Suggested combinations |
|---|---|---|---|---|---|---|---|---|---|---|---|---|---|---|---|---|
| | De | L | B | $e_x$ | $e_y$ | $l_x$ | $l_y$ | H | H1 | H2 | G | A | E | Z | | |
| T4R 22 FR 22 EU<br>T4R 22 FRN 22 EI | 22 | 80 | 62 | 68 | 50 | 50 | 43.3 | 45.5 | 43 | 12 | M5 | 65.3 | 27 | 51.6<br>53.6 | 0.5 | FSR 22 M,<br>FS 22 M |
| T4R 35 FR 32 EU<br>T4R 35 FRN 32 EI | 32 | 140 | 112 | 120 | 90 | 96 | 71.5 | 59.9 | 55.9 | 13 | M8 | 103.5 | 42 | 66.2<br>69.3 | 1.1 | FSR 35 M,<br>FS 35 M |
| T4R 35 FR 40 EU<br>T4R 35 FRN 40 EI | 40 | 140 | 112 | 120 | 90 | 96 | 77 | 62.8 | 58.8 | 13 | M8 | 117 | 42 | 72.8<br>74.3 | 1.6 | FSR 35 M,<br>FS 35 M |
| T4R 47 FR 40 EU<br>T4R 47 FRN 40 EI | 40 | 180 | 160 | 150 | 130 | 120 | 107.8 | 74.3 | 69.3 | 19 | M10 | 147.8 | 56 | 83.3<br>84.8 | 2.4 | FSR 47 M,<br>FS 47 M |
| T4R 47 FR 52 EU<br>T4R 47 RKY 52 | 52 | 180 | 160 | 150 | 130 | 120 | 116.8 | 78.6 | 73.6 | 19 | M10 | 168.8 | 56 | 90.3<br>94.8 | 3.3 | FSR 47 M,<br>FS 47 M |

# LUBR - LUBRICATOR SYSTEM FOR CIRCULAR RAILS



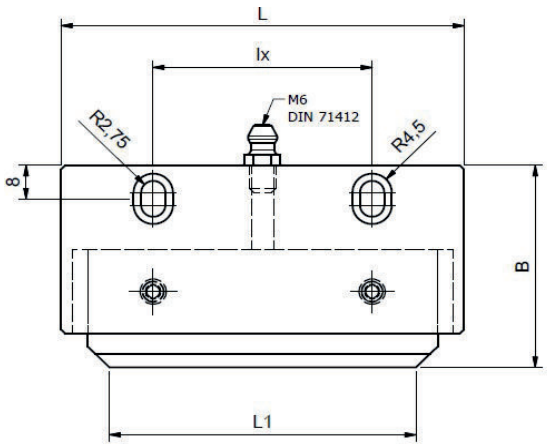


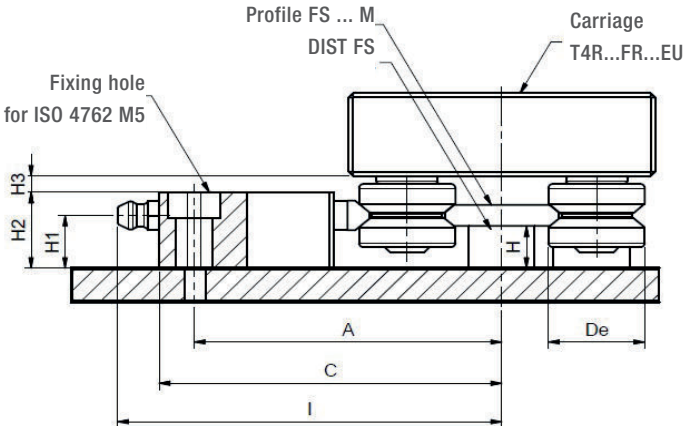


| Type | To couple with | Dimensions (mm) | | | | | | | | | | | | Weight (kg) |
|---|---|---|---|---|---|---|---|---|---|---|---|---|---|---|
| | | De | L | L1 | A | B | C | I | $I_x$ | H | $H_1$ | $H_2$ | $H_3$ | |
| LUBR 22 | FSR22M + FR22EU+DISTFS22 | 22 | 92 | 70 | 70 | 48 | 78.3 | 87.8 | 50 | 10 | 12.5 | 18 | 3.9 | 0.2 |
| LUBR 35 | FSR35M + FR32EU+ DISTFS35 | 32 | 160 | 130 | 88 | 48 | 96.5 | 106 | 100 | 15 | 19 | 26 | 5.6 | 0.4 |
| | FSR35M + FR40EU+ DISTFS35 | 40 | 160 | 130 | 94 | 48 | 102 | 111.6 | 100 | 15 | 19 | 26 | 5.6 | 0.4 |
| LUBR 47 | FSR47M + FR40EU+ DISTFS47 | 40 | 202 | 170 | 110 | 48 | 117.8 | 127.3 | 120 | 20 | 25 | 33 | 7.5 | 0.7 |
| | FSR47M + FR52EU+ DISTFS47 | 52 | 202 | 170 | 119 | 48 | 126.8 | 136.3 | 120 | 20 | 25 | 33 | 7.5 | 0.7 |
| | FSR47M + RKY52+ DISTFS47 | 52 | 202 | 170 | 119 | 48 | 126.8 | 136.3 | 120 | 20 | 25 | 33 | 7.5 | 0.7 |

1) The lubricator is supplied with felt already soaked in oil. Lubricant based on mineral oil.

2) During assembly, use the aluminum body of the lubricant to adjust the distance between the felt and the rollers until they are in contact with each other. Then secure the body with the M5 screws.

## OPTIONAL FEATURES

- Felt without lubricant (D)

# MOUNTING EXAMPLE

Assembly line
Multi-Motion-Line

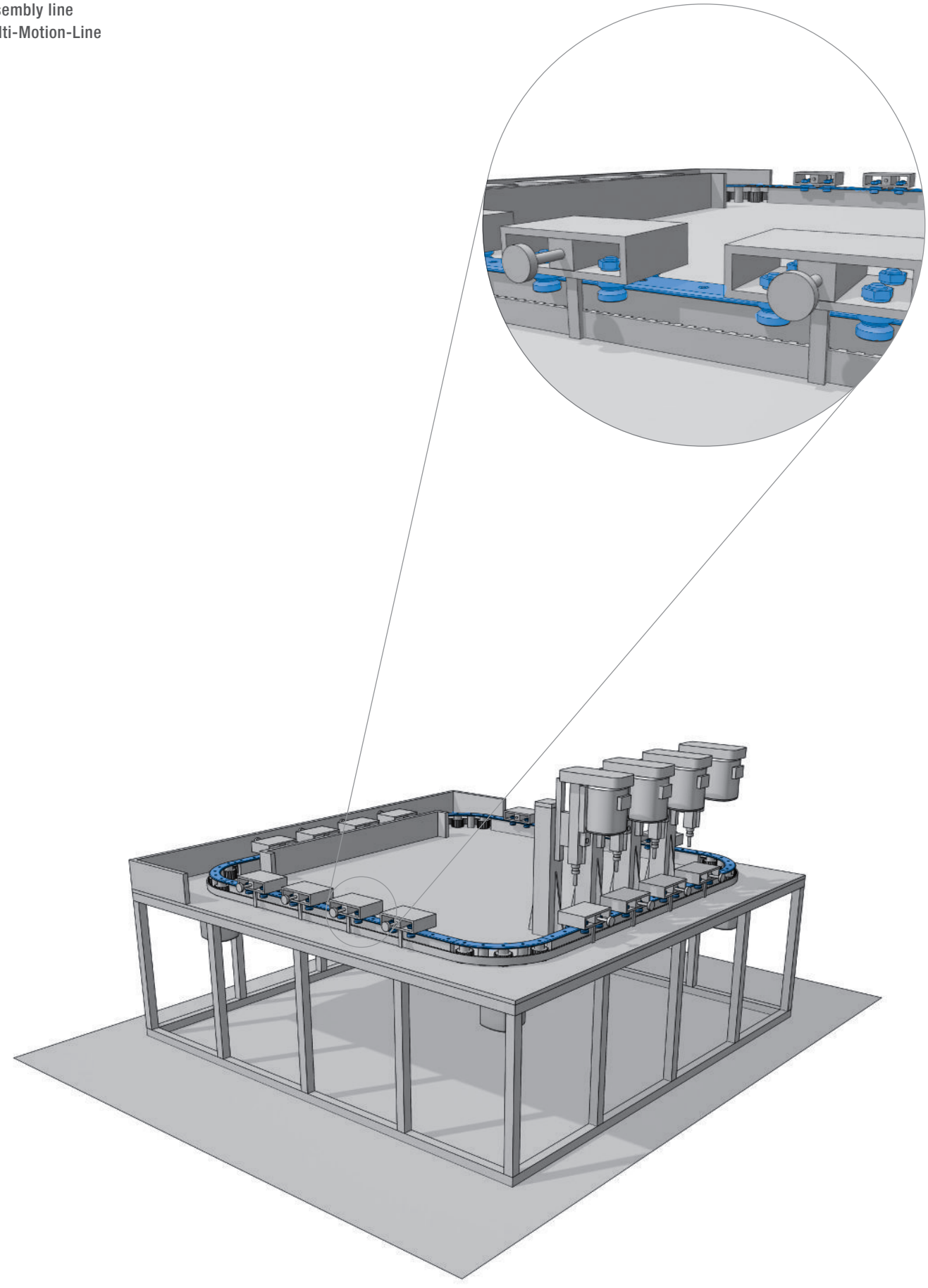

# TECHNICAL FEATURES

**With this line of products, NADELLA confirms the aim to provide manufacturing solutions tailored to the user's needs in order to achieve simple automation at a low cost. The process under way of transferring production automation and relevant handling onto increasingly heavier and cumbersome units has prompted us to seek original and flexible components for the different commodity sectors.**

We have accumulated sound working experience in the following sectors:

- Marble-working machinery
- Foundry machinery
- Metal sheet working machinery
- Special lifting machines
- Pick up
- Automatic warehouses
- Textile machines
- Machine tool protections and utilities
- Oxygen cutting machines

Our Technical Department works with Customers and recommends the best component choice by making the calculations needed to determine the best life.

## GUIDES

### LENGTH

The maximum length of each single guide component is shown on the dimensional tables. The standard lengths of the rails are determined by adding the product of the fixing hole centre distance and the number of holes to twice the end dimension (see dimensional tables).

| Length | ≥ 150 < 420 | ≥ 420 < 1050 | ≥ 1050 < 2040 | ≥ 2040 < 4020 | ≥ 4020 |
|---|---|---|---|---|---|
| Length tolerance | ± 0,5 | ± 0,8 | ± 1,2 | ± 2 | ± 2,5 |

### JOINTS

For strokes of greater length, the guide components can be joined after grinding the end faces (suffix R or RR). To maintain the hole centre distance tolerance, when ordering always specify the number of individual rails making one continuous length. Please specify in the order when rails have to be matched. The junctions are marked (letters and numbers) to avoid a mix-up of different rails.

### FIXING HOLES

The guides are available with standard holes, as shown in dimensional tables, with special hole layout or without holes (see order code referencing) Standard tolerance for hole position is ± 0,25 mm.

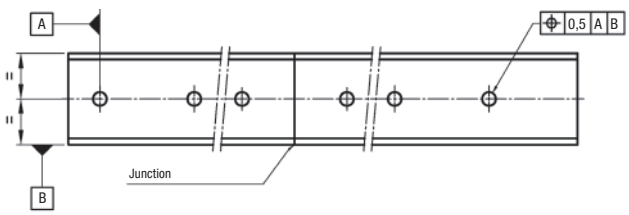


The standard boring layout is designed to fit most common application requirements, but connection strength has to be evaluated on the application case.

## STEEL GUIDES

### GENERAL

Steel rails are made of bearing steel to give best stability and durability. Raceways are induction hardened to achieve 58 HRC hardness minimum. The rail core remains soft to allow easy machining. Rails can be provided with different finishes to meet specific application requirements.

- Guide rails MT type: Profile is produced by cold drawing process, raceways are induction hardened and sandblasted to improve surface strength and finish.
- Guide rails M type: Profile is usually produced by cold drawing process, induction hardened on raceways and ground to improve surface finish and profile geometry and to remove the partially decarburised surface (0.1 mm max. on cold drawn rails ... MT). Ground rails have to be used when there are high loads, heavy duty cycles or when there is a high accuracy requirement.
- Guide rails MC type (flat rail GP ... MC only): MC rails are induction-hardened on every side and finished by-a-rough grinding.

### OPTIONS

**Corrosion protection**

For use in oxidising environments or in the presence of corrosive agents, the guides are available with chemical nickel-plating protective anticorrosion treatment (suffix NW). This treatment features substantial mechanical characteristics together with a resistance to salty mist corrosion superior to that of hard chrome. On request many rails are available in stainless-steel version (suffix NX) NX. On request can be supplied rails with different surface treatment, as chrome plating and phosphating. Rails LS are supplied with a standard surface treatment of zinc plating (suffix GZ). A wide range of stainless steel rails is available (suffix NX).

### CIRCULAR RAIL

On request circular rails can be provided. Circular rails can be used as an alternative to rotating devices or as junction between straight rails.

### TECHNICAL FEATURES

Standard rail straightness (for non-mounted rails) is 0.5 mm/m max. Higher accuracy can be supplied on request.

### TEMPERATURE

Standard operating temperature range is –20°C up to 150°C. In lower or higher temperature applications please contact NADELLA Technical Service. Special care is required if guide rollers are operating at maximum temperature.

## ALUMINUM GUIDES

### GENERAL

Made by joining an aluminium alloy support element and hardened steel rods that form the sliding surfaces. The best features of the two materials and relevant working technologies are combined to give the lightness of the alloy and the hardness and surface finish of the rods. Guides of this type can be used for structural functions; they have a high moment of inertia that enables them to be used in many applications as carrying structures. Aluminium extruded profiles are stabilised and anodised. Sliding rods are induction hardened and ground.

### OPTIONS

#### Corrosion protection

NX For use in oxidising environments or in the presence of corrosive agents, the guides of this series can feature stainless-steel bars (suffix NX).

#### Chromium-plated rods

Optionally chromium-plated rods are available (suffix CH); the thickness of the chromium plating is 10 ± 5 µm with hardness ≥ 800 HV. Please check option availability in dimensional tables.

### JOINTS

In case rail made by multiple C-DC or LM rails the most efficient joint can be realized with the insertion of a dowel pin inside the rods. This solution allows for simple assembly at the site and maintains alignment under load.

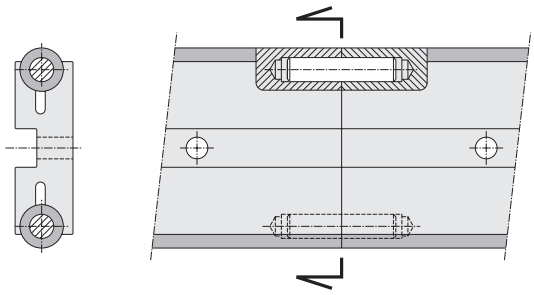

For rails FWS/FWN the joint can be realised by protruding the rods of one rail in order to engage them in the profile of the next rail. There will be a small gap between the aluminium profiles. The steel shafts are joined without gap.

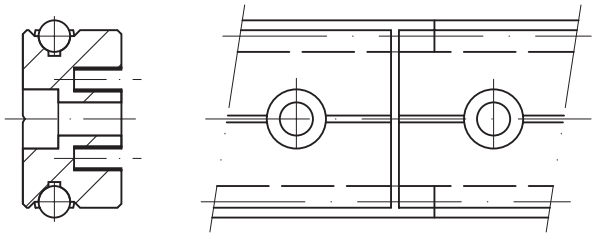

### TECHNICAL FEATURES

Standard rails' straightness (for non mounted rails) is 0.5 mm/m maximum. Higher accuracy can be supplied on request.

### TEMPERATURE

Standard operating temperature range is –20°C up to 70°C. Applications with frequent temperature variation should be avoided. For operating conditions outside the given range please contact NADELLA Technical Service.

## GUIDE ROLLERS

### GENERAL

NADELLA provide a wide range of guide rollers to be able to meet different technical and economic requirements. All guide rollers are produced in concentric and eccentric versions to allow backlash adjustment during assembly on final equipment. Eccentric rollers are identified by additional R in the code.

The sides of the races of the guide roller are slightly convex. Besides reducing rolling friction, this also permits offsetting slight guide flexing or small assembly alignment errors.

Guide rollers are fitted with seals or shields for bearing protection and lubricant retention as described in dimensional tables.

Guide rollers based on needle or tapered roller bearings (FRN ... EI,RK ...,PK ...) are recommended for critical applications with heavy axial loads and / or shock loading. Guide rollers based on ball bearings (FR ... EU, PFV, RCL) are more suitable for lighter loads or high dynamic systems.
The carriages based on Rolbloc's system are recommended for applications with heavy loads, high frequency of work and aggressive environment (dust, abrasive).

When mounting guide rails opposite to each other with connected carriages, as shown in the next sketch, a high level of parallelism between the guide rails is required when axially rigid rollers are used. To avoid operating problems it is recommended to use axially rigid fixed rollers on one carriage e.g. FR ... EU / FRR … EU and axially movable rollers on the other carriage e.g. FRL ... EU / FRLR ... EU. Movable rollers allow a little misalignment between the opposite mounted guide rails.

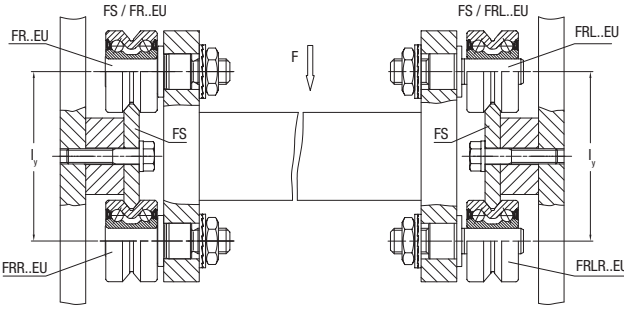


Another solution is to use one profiled guide rail e.g. FS and on the opposite side a flat rail e.g. GP in connection with rollers GC or PK.

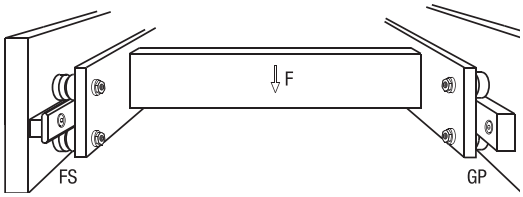

### Lubrication
Guide roller FRN ... EI, GC, FG permits bearing relubrication. All other guide rollers are long life lubricated.

### Temperature
Guide roller should not operate at constant temperature above 80°C. For short durations 100°C can be accepted. For higher temperature please see the “option section”.

### Speed limit
Max. velocity has to be determined for each application relevant to the guide roller type, size and load conditions. As general value, in normal conditions maximum speed is 4 m/sec but, with the correct choice of the components, the speed can reach 10 m/s. Contact NADELLA Technical service in case of specific request.

## OPTIONS
### Corrosion protection

NX For use in oxidising environments or in the presence of corrosive agents, the guide rollers are available in stainless steel (suffix NX) the guide rollers with tapered rollers (RKU, RKY / X, FKU, FKY / X) and needles (FRN) are equipped with standard bearings. Check in the dimensional table component availability.

### High temperature
On request guide rollers can be equipped with Viton seals to operate at temperatures up to 120°C (suffix V). Check in the dimensional table component availability.

## ACCESSORIES
### Tables and carriages
Standard table and carriages for C-, DC- and LM-systems incorporate a black anodised aluminium plate fitted with guide rollers.

### Wipers
Standard wipers NAID for C-, DC-rails are made from NBR compound moulded on a steel plate.

### Lubricators
Are composed by two main parts: a plastic box with the same shape profile of the rail, and a lubricated felt; the felt is slightly pressed on the raceways by a spring. The plastic box, that drags the raceways, works as a wiper, and removes dust and shavings.

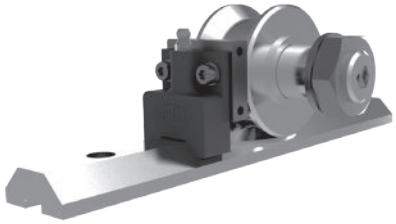

The plastic box can be mounted directly on the guide rollers plate by the appropriate aluminium plate included in the kit. In the lubricators for guide rollers size 52 or higher, the grease nipple allows an easy connection with a re-lubrication system. For the lubrication of the rails you can use one lubricator only on each raceway; in order to wipe the raceways it is better to mount two lubricators, before and after the carriage. The lubricators are supplied with the felt already lubricated.

### USE IN DIRTY ENVIRONMENT
Due to the design cam rollers with profile are especially adapted to the use in rough and dirty environment. This property has proved true in many applications such as welding plants, steel and grinding machines and is superior to recirculating ball bearing guides in continuous operation.



# LUBRICATION
### BEARING LUBRICATION
All the guide rollers, except for the FRN ... EI, based on needle bearings, are equipped with long life lubricated bearings. This means that the grease inside the bearing is enough for the entire life of the roller guide. The roller guide type FRN ... EI, with needle bearings, accommodates the re-lubrication of the bearings.

### Rail lubrication
Rails must be lubricated. This allows to reduce the friction, to reach the calculated lifetime of the system and to work at high speed. No or insufficient lubrication will cause rapid deterioration. The typical signal of tribocorrosion is the presence of a red / dark oxide and rapid wearing of the rail and guide rollers. The lubrication of the rail, the working environment and the load must be considered all together for a correct estimation of the lifetime of the guide system.

Generally speaking, for application with low duty frequency, a periodic re-lubrication with a grease or with a viscous oil will sufficiently maintain the lubrication film. The re-lubrication interval depends on the application and must always be tested in the real working conditions. In a system with ground rails and short stroke without lubricators, you can consider a re-lubrication interval every 100,000 cycles. Increasing the load, speed or stroke, or using an undersized bearing will increase lubrication demand and result in a shorter lubrication interval. For a constant lubrication we suggest the use of felt lubricators to ensure a constant layer of lubricant between guide rollers and raceways. Felt lubricators enlarge the lubrication interval more than ten times.

The recommended lubricants are greases and oil for bearings, linear rails or chains, with a high viscosity of the basic oil and with EP additives, in order to separate the metallic surfaces even with low speed.

# ASSEMBLY INSTRUCTIONS

### GUIDE ROLLERS

The eccentric guide rollers allow the preload or clearance of the carriage to be adjusted independently of the guide roller mounting hole positioning tolerance or the distance between the rails. Recommended mounting hole tolerance is H7. When adjusting the eccentric guide roller care has to be taken to avoid excessive preload. Excessive preload can reduce the life of the linear system. Set the preload turning the guide roller counterclockwise so that any movement caused by vibration will cause the nut to be tightened. Ensure the preload is not increased when tightening the nut.

A simple way of setting a roller preload is as follows:

- Move the slider on the guide, holding the roller being adjusted with two fingers to prevent it from rotating
- Increase the preload by means of the wrench
- Repeat step 1 making sure the roller slides without rolling
- When it is no longer possible to prevent roller rolling, slightly decrease the preload and fully tighten the lock nut, thereby setting the position of the eccentric.

### GUIDES

For single guide rail type FS, FWS, LS, DC, FWN and LM no special assembly instructions are necessary. For multiple parallel rails parallelism has to be checked to avoid guide rollers overload or excessive carriage play. When constant preload is required parallelism error has to be lower that 0.050 mm.
Connection between the rail and the mounting surface has to be§designed accordingly with the operating condition to ensure proper product positioning and functionality. The direction and intensity of the load, the number and strength of the screws, the geometry of mounting surfaces, use of pins or wedges have to be evaluated to fully utilize the linear guide load capacity.

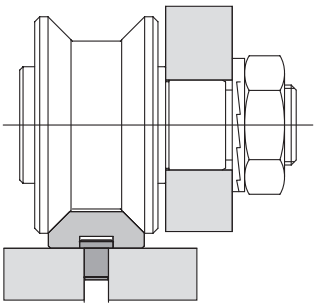

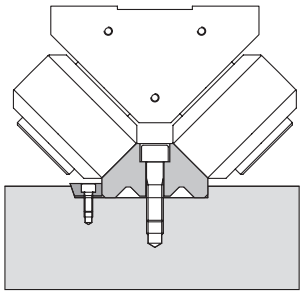

### CARRIAGES

Carriages are supplied with concentric guide rollers nut tightened already. Eccentric guide rollers have to be set and tightened during final assembly operation by customer.

# CALCULATION PROCEDURE

Calculation is carried out in two steps, first defining the forces on the most heavily loaded roller and then estimating the safety factors and life.

### CALCULATING THE LOADS ON THE GUIDE ROLLERS

In the case of complex load situations, with forces acting in different directions, calculating the reactions on the rollers is difficult and hard to simplify. In the event of the applied load having a direction parallel to one of the co-ordinate axes, the radial Pr and axial Pa components of the reactions on the most loaded roller can be obtained using elementary formulas. With reference to the diagrams shown, we obtain the load components on the rollers relevant for checking and calculating the life, applying the following methods.

Angle $\alpha$ in the formulas is half the groove angle. Look in the dimensional table notes for the correct value.

Distance $l_c$ is the effective contact distance. With the exception of Rolbloc system the correct value is calculated as the guide roller centre distance across the rail plus or minus the outer guide roller diameter De, depending if the guide is outside or between the rollers.

*Guides between the rollers*

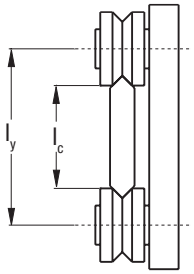


$l_c = l_y - De$

*Guides outside the rollers*

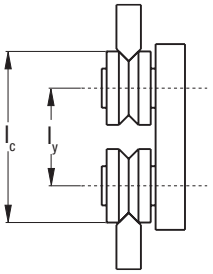


$l_c = l_y + De$

In case of Rolbloc the distance $l_c$ is the distance between the rails basis.

**Diagram a)**

**Load F applied parallel to axis Y**

*Guide between the rollers*

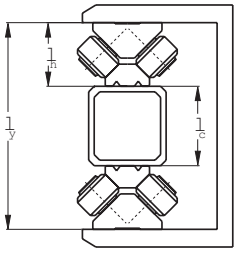


$l_c = l_y - 2 l_h$

*Guides outside the rollers*

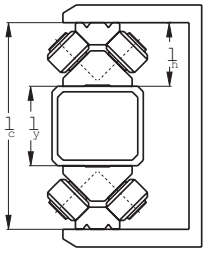


$l_c = l_y + 2 l_h$

a)

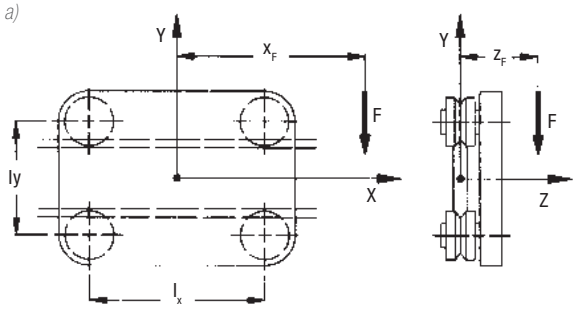


$$P_a = \frac{F \cdot z_F}{2 \cdot I_C}$$

$$P_r = \frac{F \cdot (I_x + 2 \cdot x_F)}{2 \cdot I_X} + \frac{F \cdot z_F \cdot \tan \alpha}{2 \cdot I_C}$$

Diagram c)
Load F applied parallel to axis X

b)

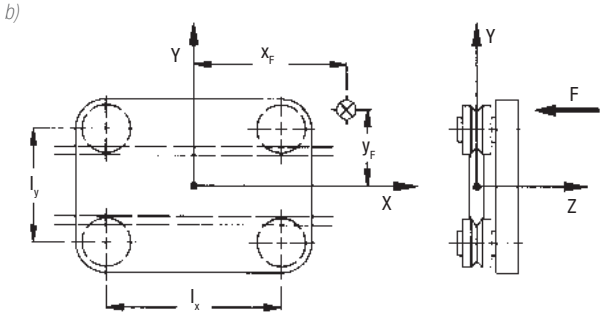


$$P_a = \frac{F}{4} + \frac{F \cdot x_F}{2 \cdot I_x} + \frac{F \cdot y_F}{2 \cdot I_C}$$

$$P_r = P_a \cdot \tan \alpha$$

Diagramma c)
Carico F applicato parallelo all'asse X

c)

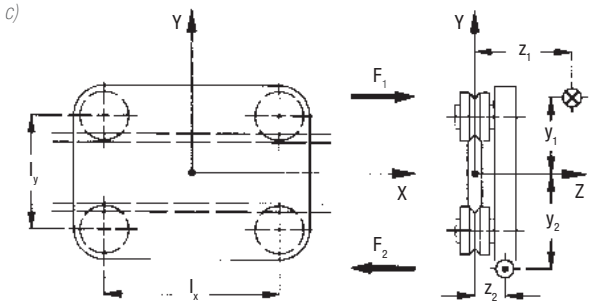


In this case the external load $F_1$, applied at the point of coordinate y1 z1, should be considered together with reaction $(F_2)=(-F_1)$ applied at the point of co-ordinate $y_2$ $z_2$.

Calling $\Delta_y$ the absolute value of $y_2$-$y_1$ and $\Delta_z$ the absolute value of $z_2$-$z_1$, the following formula is used:

$$P_a = \frac{F_1 \cdot \Delta_z}{2 \cdot I_X}$$

$$P_r = \frac{F_1}{I_X} \cdot \left( \frac{\Delta_z \cdot \tan \alpha}{2} + \Delta_y \right)$$

## GUIDE ROLLER CALCULATION

In the table for each roller the following data is specified:

- $C_w$ basic dynamic load, it is the radial load (N) that applied to the guide roller gives 100 km nominal life.
- $F_r$ limit radial load, it is the maximum radial load (N) that can be applied on the guide roller; guide roller considering the strength of the stud.
- $F_a$ limit axial load, it is the maximum axial load (N) that can be applied on the guide roller; guide roller considering the strength of the stud.
- X and Y coefficients to define the equivalent load for bearing life.
- $\alpha$ is the contact angle dependent on the guide roller type.

Rollers FRN ... EI work as combined bearings, the basic dynamic load is defined as:

- $C_{wr}$ basic radial dynamic load, it is the radial load (N) that applied to the guide roller gives 100 km nominal life.
- $C_{wa}$ basic axial dynamic load, it is the axial load (N) that applied to the guide roller gives 100 km nominal life.

Note: ISO 281 states 'the nominal life will be exceeded by 90 % of bearings before the first sign of material fatigue'.

## NOMINAL LIFE CALCULATION

System life is the minimum life of either the bearings in the guide roller or the rail / roller contact surfaces.

For the rail / roller surface see the lubrication paragraph. For the bearings' life proceed as follows.

The loads Pr and Pa are calculated for ideal condition. However, in practice, because of the structure and operating conditions a better calculation and life estimation is performed using overload factor $f_w$ as follows:

| | |
|---|---|
| 1.0 – 1.2 | Smooth operation at low speed at constant load without shocks |
| 1.2 – 1.5 | Smooth operation with load variation |
| 1.5 – 2.0 | Operation with small shocks and vibrations |
| 2.0 – 4.0 | High acceleration, shocks and vibrations |

Once $P_a$ and $P_r$ have been defined we can proceed to calculate the equivalent load $P_{eq}$ (not for FRN ... EI).

$$P_{eq} = X \cdot P_R + Y \cdot P_a \quad \text{(N)}$$

Coefficients X and Y can be obtained from guide roller tables (in the case of tapered bearings according to the ratio between $P_a$ e $P_r$). In

case of pure radial guide roller as PK and GC or floating bearings FRL, RAL, RKXL, RKUL.

$$P_{eq} = P_r \qquad (N)$$

Nominal bearing life:

$$L_{10} = 100 \cdot \left( \frac{C_w}{P_{eq} \cdot f_w} \right)^p \qquad (km)$$

Where coefficient p is:

- p = 3 for ball bearing guide rollers (FR ... EU, RCL ..., PFV ..., RAL)
- p = 10/3 for roller bearing guide rollers (PK ..., RKY, RKX, Rolbloc, GC ...)

In case of guide rollers based on needle bearings type FRN ... EI nominal bearing life is calculated as the minimum between:

$$L_{10} = 100 \cdot \left( \frac{C_{wr}}{P_r \cdot f_w} \right)^{10/3} \qquad (km)$$

and

$$L_{10} = 100 \cdot \left( \frac{C_{wa}}{P_a \cdot f_w} \right)^{10/3} \qquad (km)$$

### CHECKING THE GUIDE ROLLER MAX. LOAD

The values of the radial limit loads $F_r$ and axial limit loads $F_a$ shown in the catalogue refer to extreme operating conditions, meaning:

- $P_a = 0$ (pure radial load)
- $P_r = P_a \cdot \tan \alpha$ (maximum axial load)

In intermediate cases, when the ratio is included between the extreme values, the equivalent limit load $F_k$ to be considered must be calculated according to ratio $k = P_a / P_r$.

$$F_k = \frac{F_r \cdot F_a}{k \cdot F_r + (1 - k \tan \alpha) \cdot F_a} \qquad (N)$$

To check the strength of the guide roller, in relation to the limit load, the safety factor has to be greater than 1.

$$F_k / P_r > 1$$

**Note:** in the following common cases it is not necessary to calculate Fk and the evaluation can be completed easily. Rollers that allow axial movement (FRL, PK, RKYL, RKUL, GC) don't support axial loads.

In case of loads acting in the guide roller plane ($F_x$ o $F_y$ acting with Z=0) the axial load is also zero (0) (see calculation example n° 3).
In these cases it has to be:

$$F_r / P_r > 1$$

In case of load $F_z$ acting perpendicular to guide roller plane the axial load is maximum (see calculation example n°4).

$$F_a / P_a > 1$$

## EXAMPLES OF CALCULATION

EXAMPLE N° 1:

A FORK-LIFT TRUCK FEATURING VERTICAL MOVEMENT

The resulting magnitude of the weight passes through point (1), while the vertical force that balances this, for instance the traction of a timing belt, passes through point (2).

**Guide rollers type RKY 52 are used with guide rail type FS 62 MT:**

*overload factor* $f_w = 1,0$
*center distance* $l_x = 300$ mm
$l_y = 144.3$ mm

$F = 1800$ N
$z_1 = 100$ mm $\quad z_2 = -250$ mm
$y_1 = -150$ mm $\quad y_2 = 350$ mm
$\Delta_z = 350$ mm $\quad \Delta_y = 500$ mm

*Scheme 1:*

**Load on rollers**

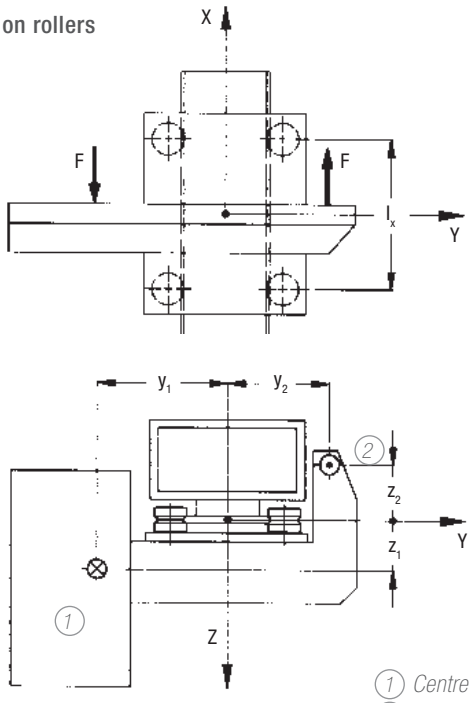


(1) *Centre of gravity*
(2) *Force passing through point*

$$P_a = \frac{1800 \cdot 350}{2 \cdot 300} = 1050 \text{ N}$$

$$P_r = \frac{1800}{300} \cdot \left( \frac{350 \cdot \tan 40°}{2} + 500 \right) = 3881 \text{ N}$$

### Nominal life

*X = 1*

*Y = 3.38*

Equivalent dynamic load

$$P_{eq} = 1 \cdot 3881 + 3.7 \cdot 1050 = 7766 \text{ N}$$

$$L_{10} = 100 \cdot \left( \frac{41000}{7766 \cdot 1} \right)^{10/3} = 25622{,}5 \text{ km}$$

### Limit load check

**Equivalent limit load $F_k$**

*$K = P_a / P_r = 0.27$*

$$F_k = \frac{11900 \cdot 4250}{0.27 \cdot 11900 + (1 - 0.27 \cdot \tan 40) \cdot 4800} = 8248 \text{ N}$$

Guide roller safety coefficient

$$F_k / P_r = 8248 / 3881 = 2{,}1$$

EXAMPLE N° 2:

THE HORIZONTAL AXIS OF A MANIPULATOR IN STEEL INDUSTRY

The centre of gravity of the vertical axis and load is placed in the middle of the horizontal centre-axis Ix and 160 mm distance from the guide axis. The dirty environment and the possibility of shocks lead to the choice of Rolbloc system.

*Scheme 2:*

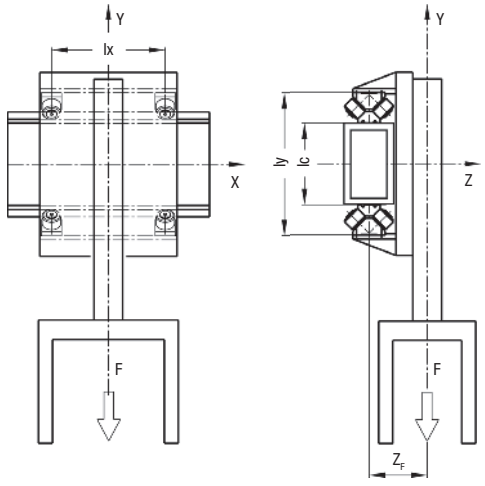


**Guide rollers BL 252 are used with guide GU 62 M:**

*Overload factor* $f_w = 1.4$

*Centre distance* $l_x = 350$ mm

$l_y = 400$ mm

*F = 6000 N*

*x = 0*

*y = –1000 mm*

*$z_F$ = 160 mm*

### Load on rollers

The effective center axis $l_c$ is 400 – 85 – 85 = 230 mm

$$P_a = \frac{6000 \cdot 160}{2 \cdot 230} = 2087 \text{ N}$$

$$P_r = \frac{6000 \cdot (350 + 0)}{2 \cdot 350} + \frac{6000 \cdot 160 \cdot \tan 45}{2 \cdot 230} = 5087 \text{ N}$$

### Nominal life

From the Rolbloc table

*X = 1*

*Y = 1*

$$P_{eq} = 1 \cdot 2087 + 1 \cdot 5087 = 7174 \text{ N}$$

$$L_{10} = 100 \cdot \left( \frac{59000}{7174 \cdot 1.4} \right)^{10/3} = 36577 \text{ km}$$

### Limit load check

*$K = P_a / P_r = 2087 / 5087 = 0.41$*

$$F_k = \frac{16800 \cdot 8400}{0.41 \cdot 16800 + (1 - 0.41 \cdot \tan 45) \cdot 8400} = 11915 \text{ N}$$

$$F_k / P_r = 11915 / 5087 = 2.3$$

EXAMPLE N° 3:

THE SLIDING DOOR OF A MACHINE TOOL (RAIL ON TOP)

The door is supported by the rail DC type on the upper edge and driven on bottom side by an auto-aligning carriage C3 RAL on LM guide rail type. Because of the effect of the bottom rail there isn't any torque applied at the DC rail. The door weight acts in a plane coincident with the roller / rail vertical axis and as such there is no overturning moment. In this case, limit load calculation can be easily carried out from basic data $F_r$ without $F_k$ calculation. Of course the calculation is always the same.

*Scheme 3:*

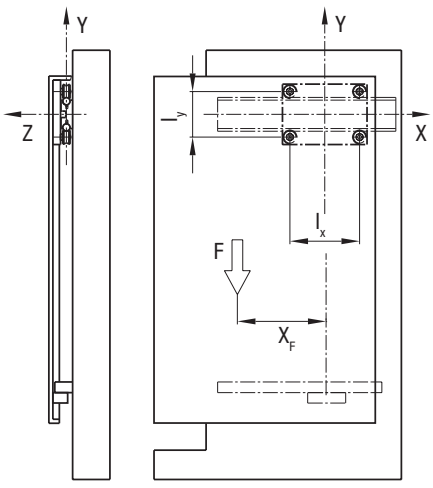

### Guide rail DC 18.65 is used with carriage T4 PFV 3518 250:

*Overload factor* $f_w = 1.1$
*Centre distance* $l_x = 213$ mm
$l_y = 113$ mm

*F = 450 N*
*x = –300 mm*
*y = –500 mm*
*z = 0 mm (because of LM rail)*

### Load on rollers

The effective center axis $l_c$ is 450 + 32 = 482 mm

$$P_a = \frac{450 \cdot 0}{2 \cdot 78} = 0 \text{ N}$$

$$P_r = \frac{450 \cdot (213 + 2 \cdot 300)}{2 \cdot 213} + \frac{450 \cdot 0 \cdot \tan 40}{2 \cdot 213} = 859 \text{ N}$$

### Nominal life

$$L_{10} = 100 \cdot \left(\frac{4550}{859 \cdot 1.1}\right)^3 = 11150 \text{ km}$$

### Limit load check

$$F_r / P_r = 1500 / 859 = 1.7$$

EXAMPLE N° 4:
TRANSFER UNIT

The box weight loads the carriage with max. axial load. In this load configuration the limit load check calculation can be easily done directly by the $F_a$ value without $F_k$ calculation.

*Scheme 4:*

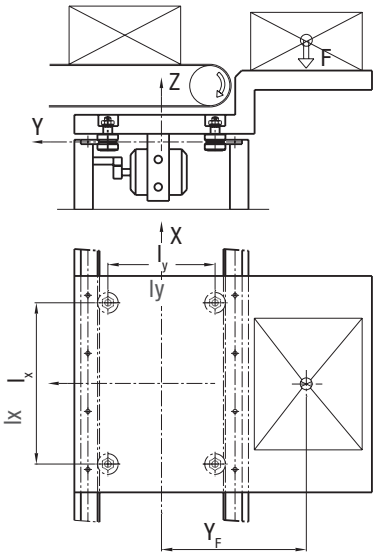


### Guide rollers FRN(R) 32 EI with rails FSH 32 M

*Overload factor* $f_w = 1.2$
*Centre distance* $l_x = 670$ mm
$l_y = 450$ mm

*F = 400 N*
*x = 0 mm*
*y = 650 mm*
*z = 50 mm*

### Load on rollers

The effective center axis $l_c$ is 450 + 32 = 482 mm

$$P_a = \frac{400}{4} + \frac{400 \cdot 650}{2 \cdot 482} = 370 \text{ N}$$

$$P_r = 370 \cdot \tan 40 = 310 \text{ N}$$

### Nominal Life

$$L_{10r} = 100 \cdot \left(\frac{5600}{310 \cdot 1.2}\right)^{10/3} = 840000 \text{ km}$$

$$L_{10a} = 100 \cdot \left(\frac{2100}{370 \cdot 1.2}\right)^{10/3} = 177600 \text{ km}$$

*L10 = 17760 km*

### Limit load check

$$F_a / P_a = 950 / 370 = 2.5$$

**For further details, contact the NADELLA Technical Service.**

# ORDERING KEY

## STEEL RAIL

ORDER CODE

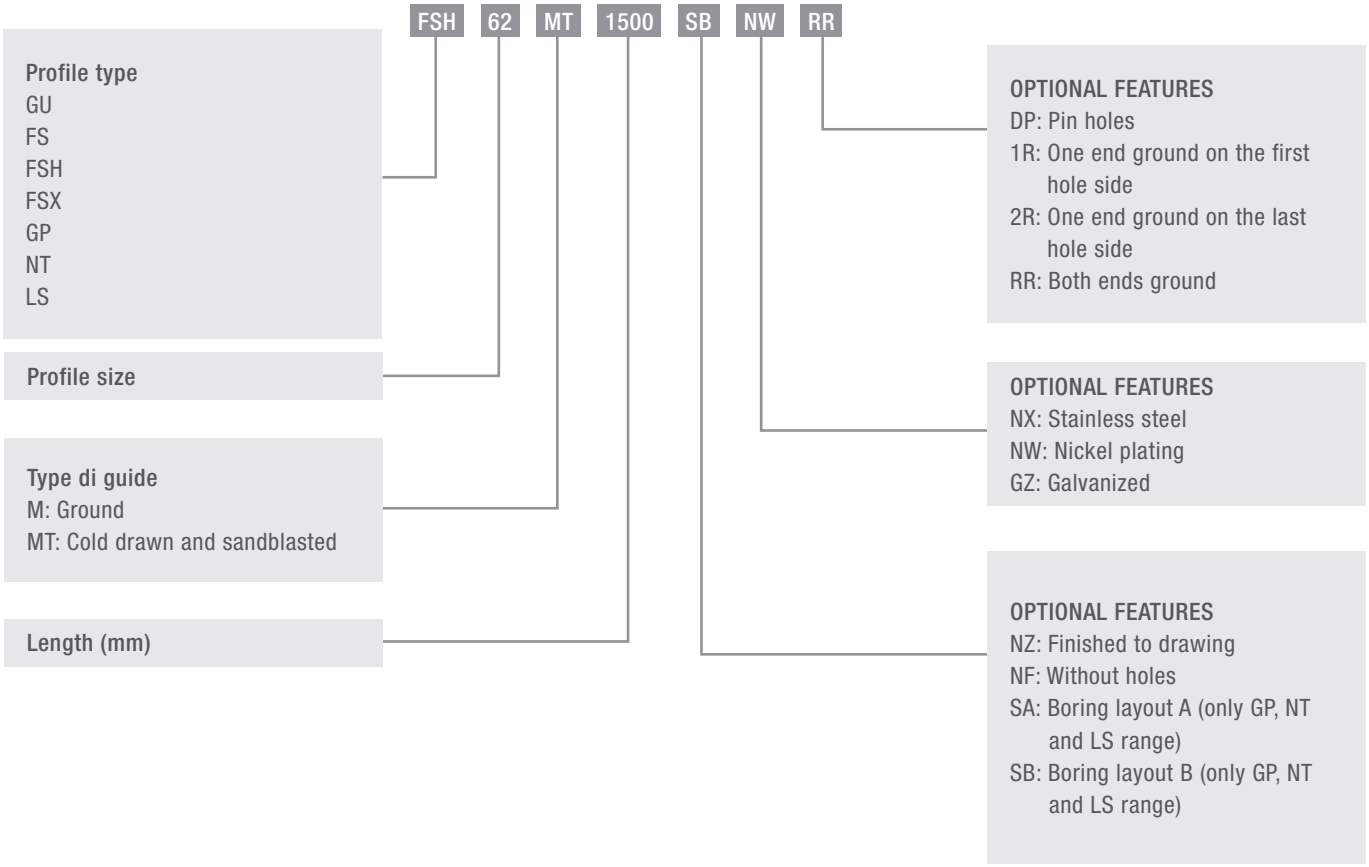


## ALLUMINIUM RAIL

ORDER CODE

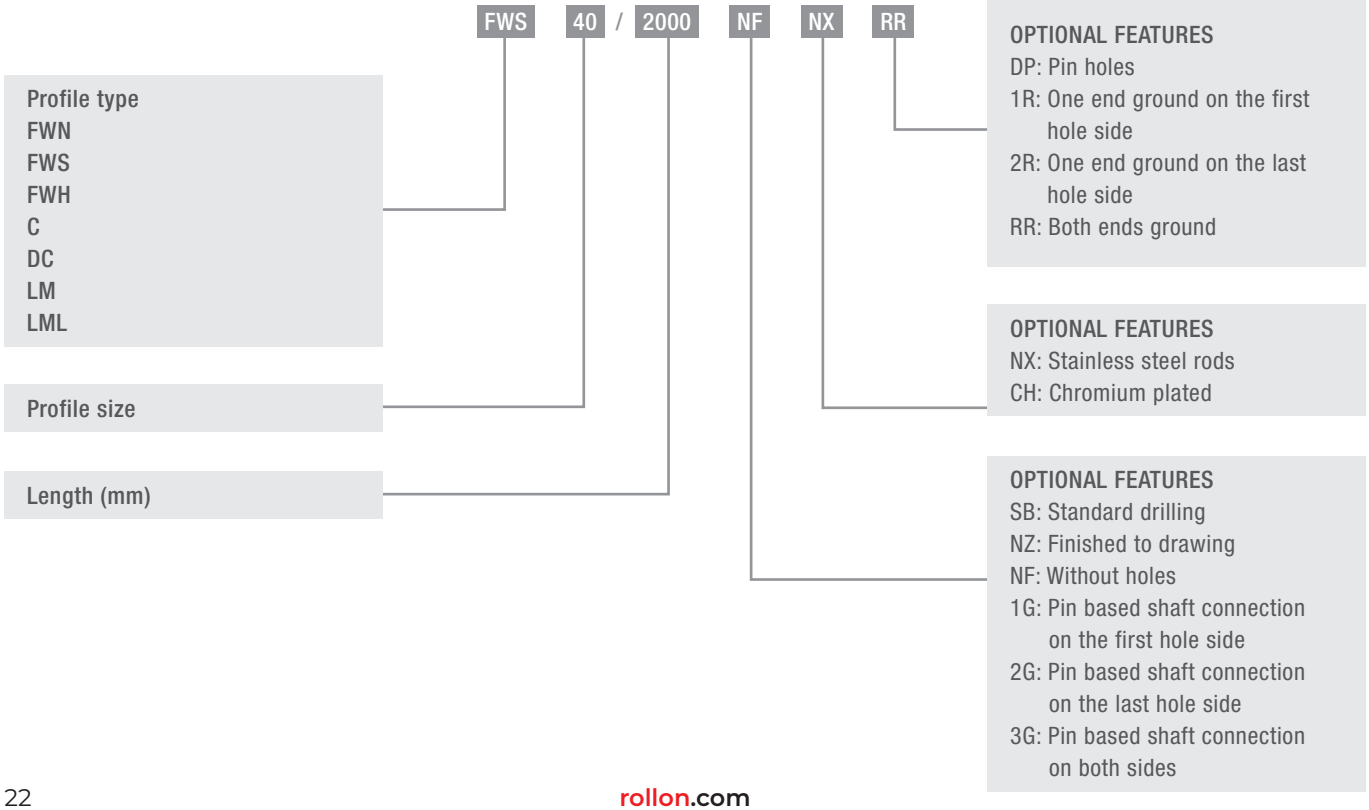

# PRODUCT INDEX (IN ALPHABETIC ORDER)


| PRODUCT | DESCRIPTION | PAGE |
|---|---|---|
| BL | Carriage with burnished steel body for the Rolbloc system | 40 |
| BL ... DS | Carriage BL with discharge system block | 41 |
| C | Rail composed by an aluminium body and one shaft in steel, with a single raceway for Base-Line system | 106 |
| C3 RAL<br>C4 RAL | Carriages with body in anodised aluminium with 3 or 4 guide rollers type RAL for auto-aligning system U-Line | 138<br>139 |
| C3 RAS | Carriage with body in anodised aluminium with 3, 4 or 5 guide rollers type RAS for auto-aligning system C-Line | 90 |
| C3 RCL<br>C4 RCL | Carriage with body in anodised aluminium with 3 or 4 guide rollers type RCL for U-Line system | 138<br>139 |
| C3 RCL16 NX<br>C4 RCL16 NX | Carriages with 3, 4 anti-corrosion rollers covered in plastic for guides LML 20 for C-Line system | 143 |
| C3 RCS | Carriages with body in brunished steel with 3 guide rollers type RCS for auto-aligning system C-Line | 90 |
| C3 RYL<br>C4 RYL | Carriage with body in anodised aluminium with 3 or 4 guide rollers type RCL and RAL for auto-aligning system U-Line | 138<br>139 |
| C3 RT<br>C4 RT<br>C5 RT<br>C6 RT | Carriages with body in brunished steel 3,4,5, 6 and 6 RT and RTL guide rollers for NT guide of the auto-aligning C-Line | 90<br>91<br>92<br>93 |
| C3 RTL<br>C4 RTL<br>C5 RTL<br>C6 RTL | Carriages with body in brunished steel 3,4,5, 6 and 6 RT and RTL guide rollers for NT guide of the auto-aligning C-Line | 90<br>91<br>92<br>93 |
| C3 RTY<br>C4 RTY<br>C5 RTY<br>C6 RTY | Carriages with body in brunished steel 3,4,5, 6 and 6 RT and RTL guide rollers for NT guide of the auto-aligning C-Line | 90<br>91<br>92<br>93 |
| DC | Rail composed by an aluminium body and two shafts in steel, with two raceways for Base-Line system | 105 |
| DIST FS | Spacers for rails FS, FSH and FSR | 61 |
| FG<br>FGU | Guide rollers with needle roller bearings (FGU), for GP guides | 30 |
| FK | Guide roller with tapered roller bearings for GP rails of Heavy-Line system | 27 |
| FKU | Guide roller with tapered roller bearings for GU rails of Heavy-Line system | 20 |
| FKX | Guide roller with tapered roller bearings for FSX rails of V-Line system | 58 |
| FKY | Guide roller with tapered roller bearings for FS and FSH rails of V-Line system | 58 |
| FR ... EU | Guide roller with ball bearings for FS and FSH rails of V-Line system, and FWS and FWH rails of Base-Line system | 54<br>116 |
| FR ... EU AS / AZ | Floating guide rollers with ball bearings for FS and FSH rails of V-Line system, and FWS and FWH rails of Base-Line system | 55<br>117 |
| FRL ... EU | Floating guide rollers with needle roller bearings for FS and FSH rails of V-Line system, and FWS and FWH rails of Base-Line system | 59 |
| FRN ... EI | Guide roller with needle roller bearings for FS and FSH rails of V-Line system | 56 |
| FS ... M<br>FSH ... M | Rail in steel with ground raceways, for V-Line system | 49<br>67 |
| FS ... MT<br>FSH ... MT | Rail in steel with sandblasted raceways, for V-Line system | 48<br>50 |
| FSHZ-FSXZ | Guide rail with integrated rack transmission | 52 |
| FSR ... M | Circular rail in steel, for Multi-Motion-Line system | 73 |
| FSRO | Oval circuit composed of linear and circular pieces of rail for Multi-Motion-Line system | 75 |
| FSRQ | Ring circuit composed of linear and circular pieces of rail for Multi-Motion-Line system | 76 |

| PRODUCT | DESCRIPTION | PAGE |
|---|---|---|
| FSX ... M | Rail in steel with ground raceways, for V-Line system | 51 |
| FSX ... MT | Rail in steel with sandblasted raceways, for V-Line system | 50 |
| FWH | Rail composed by an aluminium body and one shaft in steel, with a single raceway for Base-Line system | 115 |
| FWN | Rail composed by an aluminium body and two shafts in steel, with two raceways for Flexi-Line 645 system | 125 |
| FWS | Rail composed by an aluminium body and two shafts in steel, with two raceways for Base-Line system | 114 |
| GC..SW | Guide roller with needle roller bearings for GP rails of Heavy-Line system | 28 |
| GLA | Guide roller with double row of balls with oblique contact, with “gothic arch” profile for U-Line system | 137 |
| GP ... M | Rail in steel, ground raceways for Heavy-Line system | 24 |
| GU ... M | Rail in steel, ground raceways for Heavy-Line and Rolbloc system | 39/18 |
| GU ... MT | Rail in steel, sandblasted raceways for Heavy-Line and Rolbloc system | 39/18 |
| LM | Rail composed by an aluminium body and two shafts in steel, with two internal raceways for U-line system | 134 |
| LML | Rail totally in aluminium with two internal raceways for U-line system | 142 |
| LS | Rails totally in steel with internal hardened raceways for C-Line system | 90 |
| LUBC | Lubricator for Base-Line system (guide rollers running on C and DC rails) | 113 |
| LUBL | Lubricator for Rolbloc | 43 |
| LUBM | Lubricator for U-Line system (carriages running in LM rails) | 141 |
| LUBR | Lubricator system for circular rails | 79 |
| LUBP | Lubricator for Heavy-Line system (guide rollers running on GP rails) | 32 |
| LUBU | Lubricator for Heavy-Line system (guide rollers running on GU rails) | 22 |
| LUBX, LUBY | Lubricator for V-Line system (guide rollers running on FS and FSH rails) | 63 |
| LUBZ | Lubrication wheel | 63 |
| NAID | Wipers for C and DC rails of Base-Line system | 112 |
| NT | Rails totally in steel with internal hardened raceways with V-profile for C-Line system | |
| PFV gothic profile | Guide roller with “gothic arch” profile, based on ball bearings, for C and DC rails of Base-Line system, and LM rails of U-Line system | 107 135 |
| PFV | Guide roller based on ball bearings, for C and DC rails of Base-Line system, and LM rails of U-Line system | 108 |
| PK | Guide roller with tapered roller bearings for GP rails of Heavy-Line system | 26 |
| PR | Adjustment plates for BL carriages of Rolbloc system | 42 |
| PZ | Pinion for FSHZ-FSXZ guide rail | 62 |
| RAL | Floating guide rollers with “gothic arch” profile, with a double row of balls with oblique contact, for LM rails of U-Line system | 136 |
| RAS | Floating guide rollers with balls for LS rails of C-Line system | 92 |
| RCL | Guide rollers with “gothic arch” profile, with a double row of balls with oblique contact, for LM rails of U-Line system | 135 |
| RCP | Guide rollers with “gothic arch” profile, with a double row of balls with oblique contact, for LM rails of U-Line system | 135 |
| RCS | Guide rollers with balls profile, for LS rails of C-Line system | 91 |
| RKO | Guide rollers with tapered roller bearings, with “gothic arch” profile for C and DC rails of Base-Line system | 110 |
| RKU | Guide rollers with tapered roller bearings, for GU rails of Heavy-Line system | 19 |
| RKUL | Floating guide rollers with tapared roller bearings for GU rails of heavy line system | 21 |
| RKX | Guide rollers with tapered roller bearings, for FSX rails of V-Line system | 57 |
| RKY | Guide rollers with tapered roller bearings, for FS and FSH rails of V-Line system | 57 |
| RKYL RKXL | Floating guide rollers with tapered roller bearings for FS ... rails of V-Line system | 60 |
| RPT | Wipers for Rolbloc BL carriages | 43 |
| SAG | Guide pins for the mounting alignment of GU rails of Heavy-Line system | 23 |
| TA4 / TB4 | Carriages with anodised aluminium body with four guide rollers type GLA for FWN rails of Flexi-Line system | 126 |
| T4 FR | Carriages with anodised aluminium body with four guide rollers type FR ... EI for FWS rails Base-Line system | 119 |

| PRODUCT | DESCRIPTION | PAGE |
|---|---|---|
| T4 PFV | Carriages with anodised aluminium body with four guide rollers type PFV with “gothic arch” profile for C and DC rails of Base-Line system, and LM rails of U-Line system | 111<br>140 |
| T4 R … | Carriages with fixed guide rollers<br>Steering carriage for FSR ... M circular rails of Multi-Motion-Line system | 77<br>78 |
| T4 RAL | Carriages with black anodised aluminium body with four floating guide rollers type RAL with “gothic arch” profile for LM rails of U-Line system | 140 |
| T4 RCL<br>T4 RCP | Carriages with black anodised aluminium body with four guide rollers type RCL or RCP with “gothic arch” profile for LM rails of U-Line system | 140 |
| T4 RYL | Carriages with black anodised aluminium body with four guide rollers type RCL / RCP and RAL with “gothic arch” profile for LM rails of U-Line system | 140 |

# SUFFIX INDEX (IN ALPHABETIC ORDER)

| | |
|---|---|
| SA | Standard hole pattern according to the catalogue |
| AC | Hollow shafts optional for rails C, DC and LM |
| SB | Standard hole pattern according to the catalogue |
| CH | Chromium plated shafts |
| D | Felt without lubricant |
| DP | Pin holes |
| EE | Synthetic sealer for GC |
| EEM | Ground profile |
| G | Pin based shaft connection |
| GZ | Surface zinc-plated for LS rails (C-Line) |
| M | Ground profile |
| MC | Rough ground profile (for GP rails) |
| MM | Metallic sealer for FGU |
| MT | Sandblasted profile |
| NF | Rails without holes |
| NX | Stainless steel version for guide rollers or guide rails |
| NW | Chemical nickel-plating |
| NZ | Finishes to drawing |
| 1R | One end ground on the first hole side |
| 2R | One end ground on the last hole side |
| RR | Both ends ground |
| S | Holes for DC guide |
| UU | Felts for lubrication available (for carriages TA4 and TB4 of Flexi-Line 645 system) |
| V | Seals in Viton |




The content of this document and its use are subject to the general terms of sale of ROLLON available on the web site www.rollon.com