ROLLON®
BY TIMKEN

MINIROLLER RAIL

Data sheet - rev. 1.0

LINEAR COMPONENTS

myRollon

myRollon is Rollon's **digital working platform** designed to simplify the selection and configuration of linear and rotary motion solutions. It enables users to identify the most suitable motion system based on their specific application requirements, enhancing design precision and efficiency.

By centralizing essential tools and resources in a unified environment, myRollon empowers users to access all necessary services and information — saving time and boosting productivity in search of high-performance motion solutions.

SCAN ME!

Index

Ordering key 4
Features and advantages 5
Components and dimensions 6
Use and Maintenance 9
Static load and service life 12

ORDERING KEY

MiniRoller Rail rail / carriage system

RMR	V C	0000	2	SMR SMRX	11	4	2Z 2RS	N Z
								Rail surface treatment - Blank = zinc-plated (standard), N = nickel plating, Z = zinc-nickel (optional)
							Roller type	
						Number of rollers in the slider		
					Size			
				Slider type - X = stainless-steel				
			Number of sliders					
		Rail length [mm]						
	Rail holes - V = countersunk 90° head screws, C = socket cap screws							
Series								

Ordering example: **RMRV-1950-2-SMRX-11-4-2RS-Z**

Rail lengths are always stated with four digits. Please pad with zeros to fill in lengths with less than four digits, e.g. 800 mm length is a "0800".

FEATURES AND ADVANTAGES

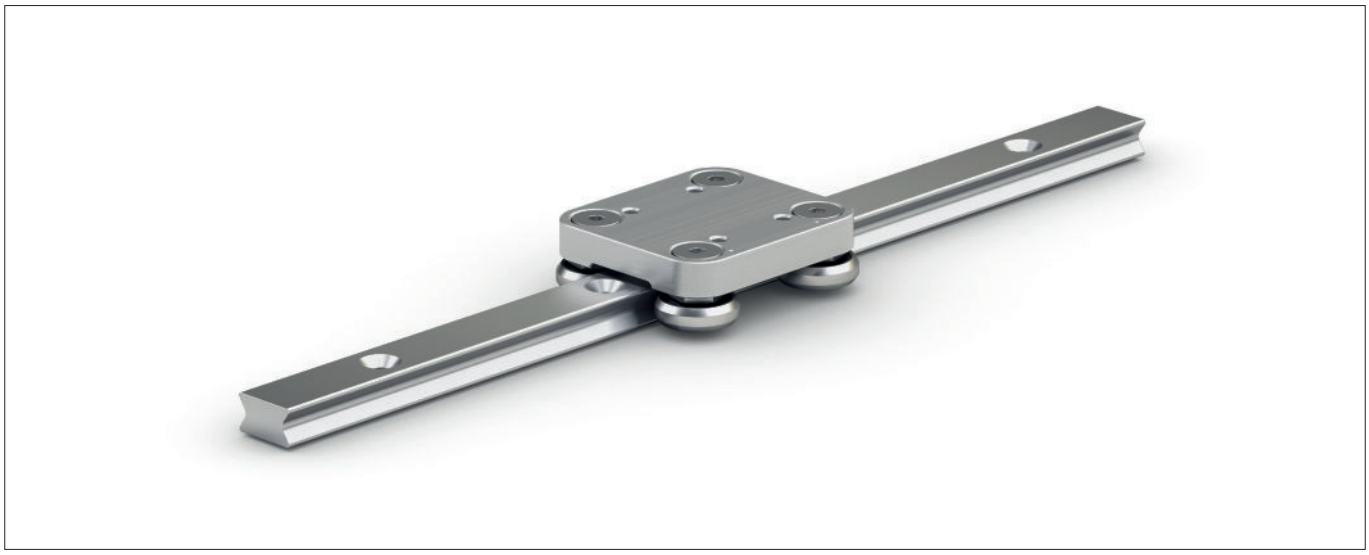

Fig.1

MiniRoller Rail is an alternative to miniature ball guide in several industries and applications.

MiniRoller Rail is a steel linear guide with a compact design, featuring radial ball bearings that roll on an induction-hardened and honed raceway. It can accommodate deviations in parallelism of up to 0.03 mm.

The rail is manufactured from cold-drawn carbon steel and features an electrolytic zinc-plated and passivated surface treatment, which serves as a standard corrosion protection measure. Other treatments are available for higher corrosion resistance, these include zinc-nickel and nickel plating. The raceways are induction-hardened and honed for smoothness and maximizing the service life.

The slider body is made of steel with an electrolytic zinc-plated and passivated surface treatment. Additionally, a stainless-steel version is available for enhanced corrosion resistance upon request.

MiniRoller Rail is particularly suitable for handling moderate loads that require smooth and silent operation even in tight spaces. It finds application in aerospace, medical, pharma, food & beverage, and cosmetics.

Performance characteristics

- Available sizes: 11
- Max. operating speed: 3 m/s
- Max. acceleration: 5 m/s²
- Temperature range: -20 °C to +120 °C

Rails

- Material: cold-drawn carbon steel
- Available rail lengths: From 150 mm up to 1950 mm
- Surface treatment: Electrolytic zinc-plated and passivated as standard, also available in zinc-nickel, and nickel plating for increased protection
- Induction hardened and honed raceways.

Sliders

- Material: Steel and stainless-steel
- Surface treatment: Electrolytic zinc-plated and stainless-steel.
- Bearings material: Steel or stainless-steel (optional)
- Bearings are lubricated for life
- Bearings seal/shield: Standard 2Z (steel cover disc), 2RS splash-proof nitrile seal.

MAIN ADVANTAGES

Space saving

High performance while offering a space-saving design, making it ideal for compact applications.

Easy maintenance

The rollers and end chamfers on the carriage simplify slider removal and installation, making maintenance simple and efficient, reducing downtime.

Easy preload adjustement

Adjustable rollers allow slider preload adjustment to customize rolling and motion characteristics.

Uniquely quiet

Honed raceways and roller ball bearings help to ensure low friction and low noise.

Optimal reliability in dirty environments

Ideal for harsh environments since their rolling components make them highly resistant to dust and dirt contamination.

COMPONENTS AND DIMENSIONS

Rail section

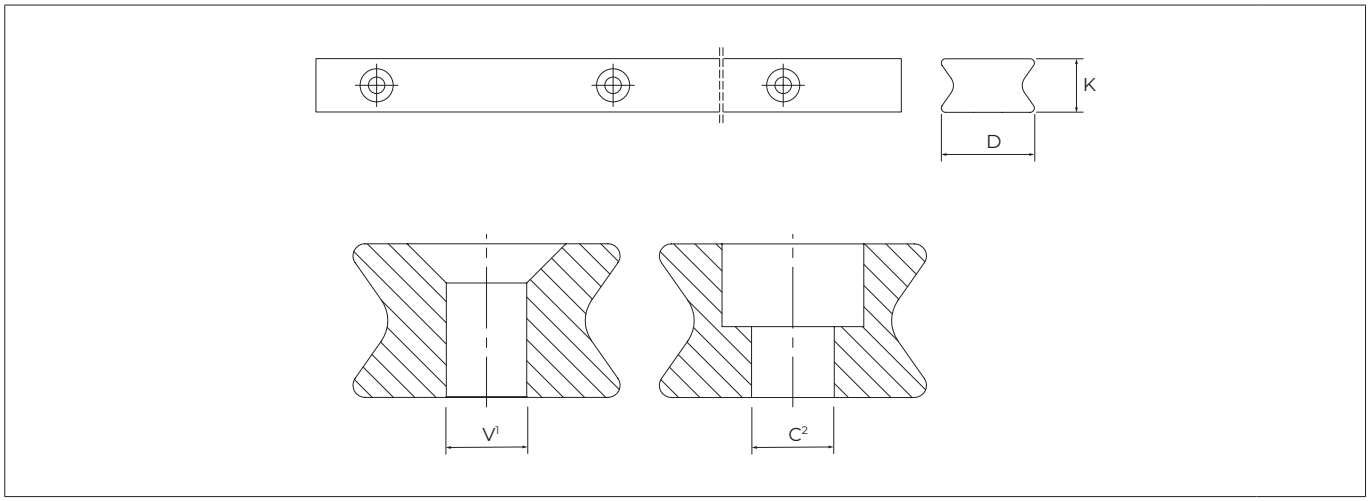

[1] Fixing holes (V) for countersunk 90 degrees head screws according to DIN 7991.
[2] Fixing holes (C) for socket cap screws according to DIN 912.

Fig.2

Type	D [mm]	K [mm]	C[2]	V[1]	Weight [kg/m]
RMR	11.3	6.5	M3	M3	0.48

Tab.1

Rail length

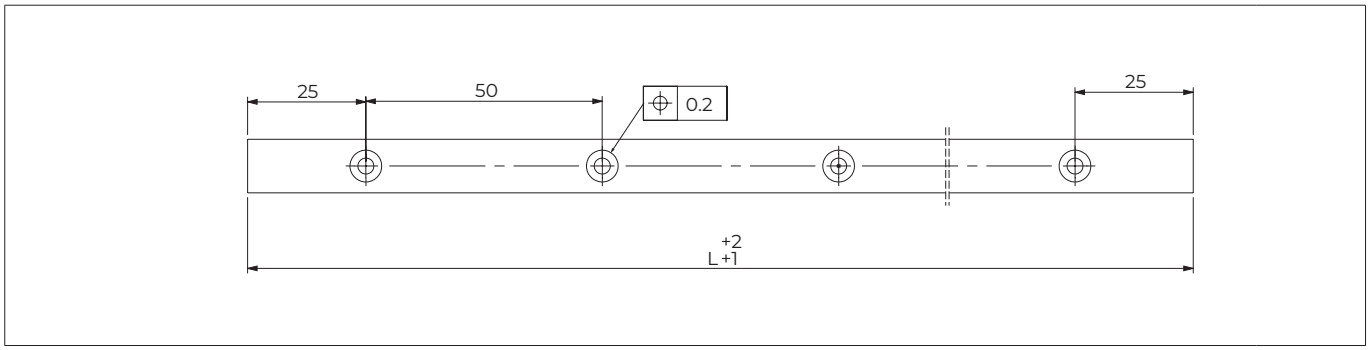

Fig.3

Type	Size	Min length [mm]	Max length [mm]	Available standard lengths L [mm]
RMR	11	150	1950	150 - 200 - 250 - 300 - 350 - 400 - 450 - 500 - 550 - 600 - 650 - 700 - 750 - 800 - 850 - 900 - 950 - 1000 - 1050 - 1100 -1150 - 1200 - 1250 - 1300 - 1350 - 1400 - 1450 - 1500 - 1550 - 1600 - 1650 - 1700 - 1750 - 1800 - 1850 - 1900 - 1950

Tab.2

■ Slider

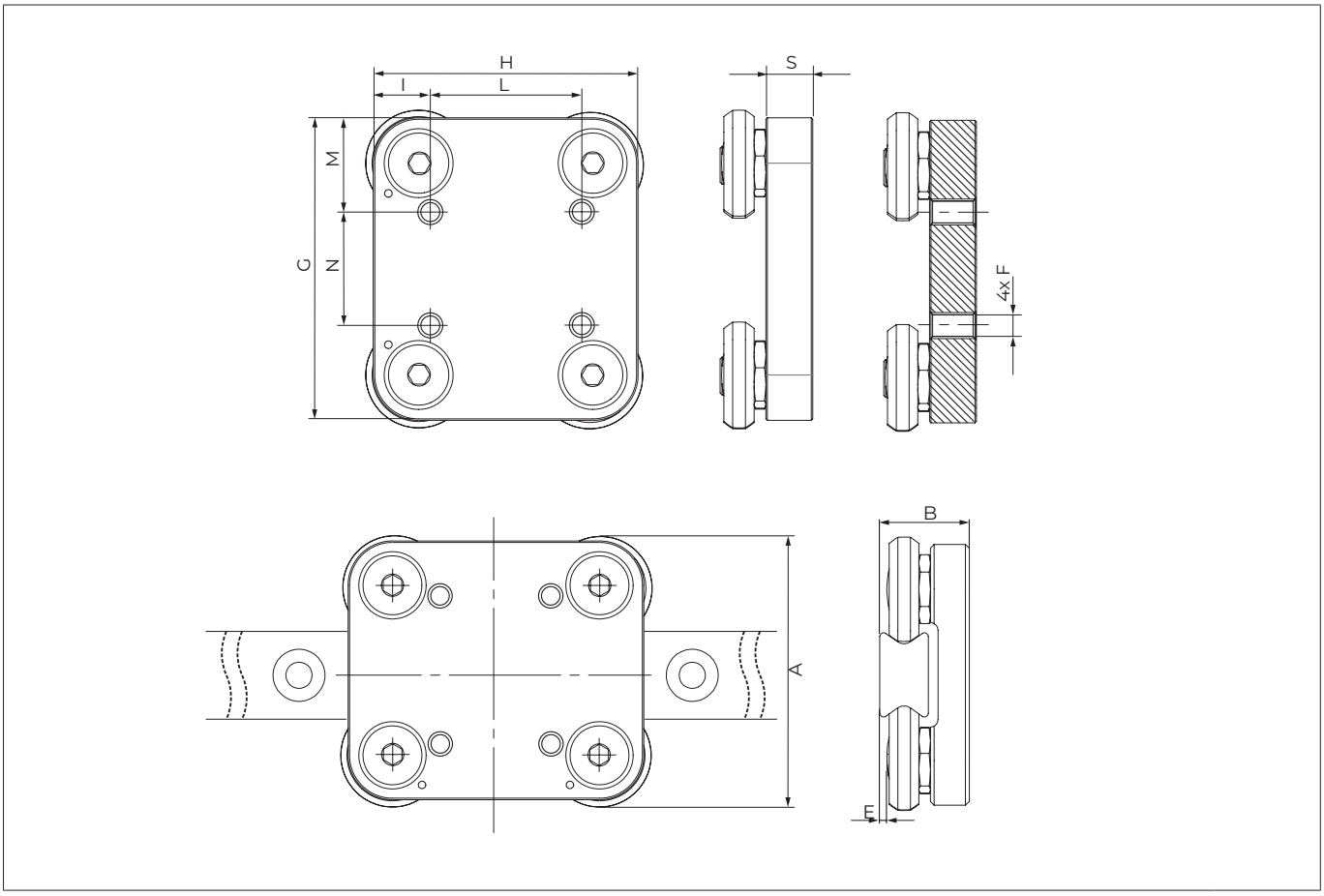

Fig.4

Type	A [mm]	B [mm]	E [mm]	G [mm]	H [mm]	N [mm]	L [mm]	M [mm]	I [mm]	S [mm]	F	Weight [kg]
SMR11	38	13	0.75	39	35	15	20	12	7.5	6.2	M3	0.08

Tab.3

■ Load capacities and static moments

Type	C [N]	C_{0rad} [N]	C_{0ax} [N]	M_x [Nm]	M_y [Nm]	M_z [Nm]
SMR11	1530	820	375	2.3	5.9	10.3

Tab.4

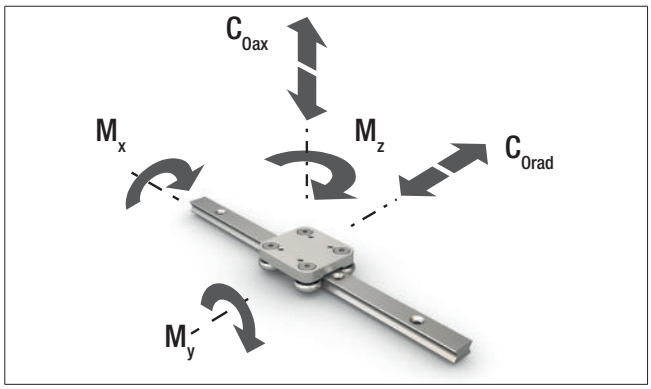

Fig.5

■ Rollers

CPN
Concentric roller
CPA
Eccentric roller

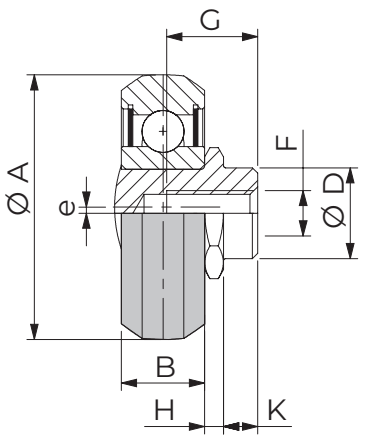

e = Eccentricity

Note: The bearings are lubricated for life.

Fig.6

Type	Material	A [mm]	B [mm]	D [mm]	e [mm]	H [mm]	K [mm]	G [mm]	F	C [N]	C_{0rad} [N]	Weight [kg]
CPN18-2RS	Steel	14	4	6	-	1.55	1.8	5.5	M4	765	410	0.004
CXPNX18-2RS	Stainless-steel	14	4	6	-	1.55	1.8	5.5	M4	765	410	0.004
CPN18-2Z	Steel	14	4	6	-	1.55	1.8	5.5	M4	765	410	0.004
CPA18-2RS	Steel	14	4	6	0.4	1.55	1.8	5.5	M4	765	410	0.004
CXPAX18-2RS	Stainless-steel	14	4	6	0.4	1.55	1.8	5.5	M4	765	410	0.004
CPA18-2Z	Steel	14	4	6	0.4	1.55	1.8	5.5	M4	765	410	0.004

2RS = splash-proof nitrile seal; 2Z = Steel cover disc.

Tab.5

USE AND MAINTENANCE

▪ Bearings lubrication

All bearings of the MiniRoller rail are lubricated for life.

▪ Lubrication of the raceways

Rails must be lubricated before operation. Recommended lubrication intervals are heavily dependent upon the ambient conditions, speed, and temperature. Under normal conditions, lubrication is recommended after 100 km operational performance or after an operating period of six months - whichever comes first. In critical applications, the interval should be shorter. Please clean the raceways carefully before lubrication.

We recommend a high quality ball-bearing grease lubricant consisting of mineral oil with a white lithium soap base of NLGI 2 grade.

Proper lubrication during normal conditions:

- Reduces friction
- Reduces wear
- Reduces running noise

Different lubricants are available by request for special applications:

- FDA-approved lubricant for use in the food industry
- Specific lubricant for clean rooms
- Specific lubricant for the marine technology sector
- Specific lubricant for high and low temperatures

For specific information, contact Rollon technical support.

▪ Corrosion protection

The MiniRoller rails and slider bodies come standard with electrolytic zinc plating with passivation for anticorrosion protection. If increased corrosion protection is required, application-specific surface treatments are available upon request for rails e.g. approved nickel plating for use in the food industry. In this case, the chosen treatment must be specified in the order for rails using the appropriate code shown in the table below. For more information contact Rollon technical support.

Treatment	Characteristics
Electrolytic zinc plating with passivation	The treatment is commonly used in sectors where a major corrosion resistance is required. The layer of the treatment is removed by honing, and the raceways are protected with post-honing oil.
ZincNickel ISO19598 (Z)	Ideal for outdoor applications. Stainless steel sliders are ideal when combined with zinc nickel rails. The raceways are treated.
Nickel Plating (N)	Provides high resistance to chemical corrosion and is ideal for applications in medical or food related environments. The raceways come with Nickel plating treatment. Stainless steel sliders are ideal when combined with nickel plated rails.

Tab.6

▪ Preload classes

The factory installed systems, consisting of rails and sliders, are available in two preload classes:

Standard preload K1 means a rail-slider combination with minimum preload which means the rollers are adjusted free of clearance for optimal running properties.

Usually preload K2 is used for rail-slider systems to increase rigidity.

When using a system with K2 preload, a reduction of the loading capacities and service life must be taken into consideration (see Tab.7).

The coefficient y is used in the calculation formula for checking the static load and lifetime (see Pg.15). The interference is the difference between the contact lines of the rollers and the raceways of the rail.

Type	Preload class	Reduction y	Interference* [mm]
11	K1	-	0.01
	K2	0.1	0.03

* Measured by the minimum outer dimension between the raceways

Tab.7

▪ Setting the preload

Type	Tightening torque [Nm]
ZK-RMR...	3

Tab.8

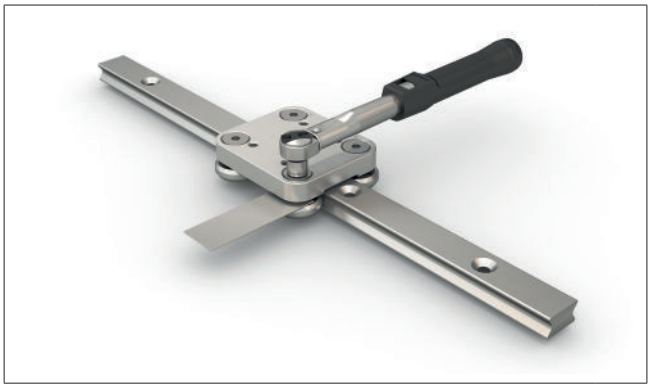

Fig.7

If the MiniRoller rails are delivered as a system, the sliders are already set with no clearance. In this case the fixing screws are secured with thread locking glue at the factory.

If delivered separately, or if the sliders are to be installed in another track, the eccentric roller pins must be readjusted. Important: The fixing screws must be secured with thread-locking adhesive. The following points must also be observed:

- Use thread locking glue for fixing screws to prevent loosening.
- Wipe the raceways of any dirt and debris.
- Slightly loosen the fixing screws of the roller mounting. The eccentric roller pins are marked on the bottom (see Fig.8).
- Position the slider(s) at the ends of the rail.
- The special flat key provided is inserted from the side onto the hexagon of the roller to be set (see Fig.7).
- By turning the flat key clockwise the roller is pressed against the raceway and thus reduces the clearance. Note that increasing the preload also increases friction, which can reduce service life.
- Hold the roller pin with the adjustment key in the desired position and carefully tighten the fixing screw.
- Move the slider on the rail and check the preload over the entire length of the rail. It should move easily and the slider should not have play at any location of the rail.
- Now tighten the fixing screws with the specified tightening torque (see Tab.8), while the flat key holds the angle adjustment of the pin. A special thread in the roller pin secures the set position.

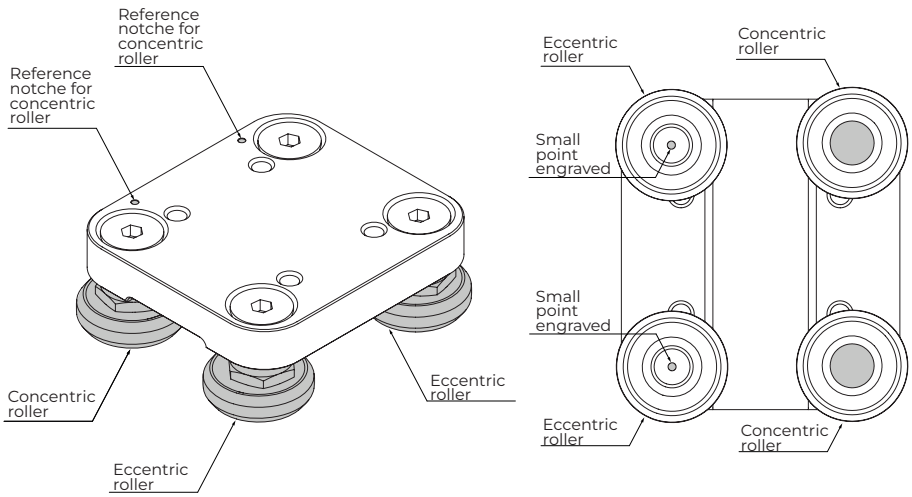

Fig.8

▪ Installation of two rails in parallel

If two MiniRoller rails are installed in parallel, the height difference of the two rails must not exceed a certain value (as shown in the table below) to ensure proper guiding. These maximum values result from the maximum allowable twisting angle of the rollers in the raceways (see Tab.9).

Setting the preload

Size	α
11	1 mrad (0.057°)

Tab.9

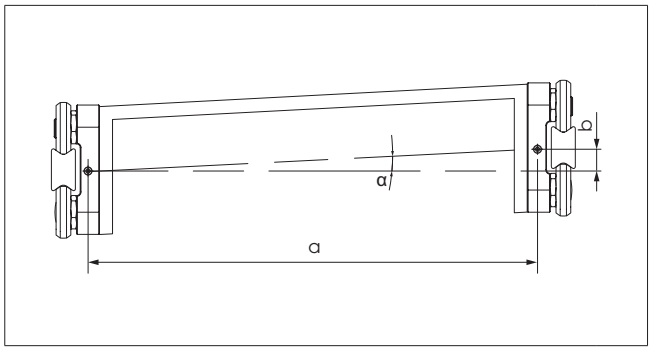

Fig.9

Example: if a = 500 mm; b= a*tanα = 0.5 mm

When using two rails, the maximum parallelism deviation must not be exceeded (see Tab.10). Otherwise stresses can occur, which can result in a reduction in load capacity and service life.

Size	K1	K2
11	0.03	0.02

Tab.10

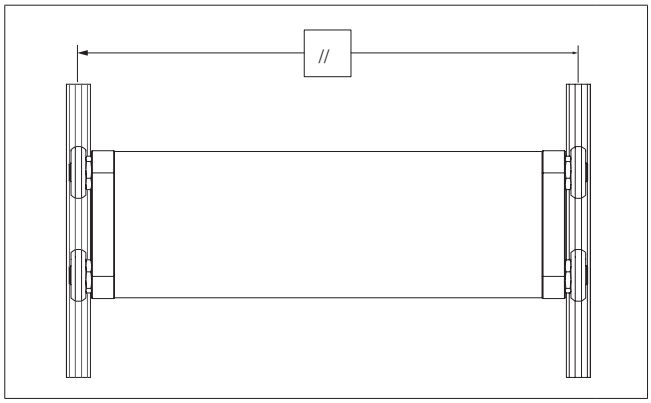

Fig.10

STATIC LOAD AND SERVICE LIFE

▪ Static load

The radial load capacity rating, $C_{0\mathrm{rad}}$ the axial load capacity rating $C_{0\mathrm{ax}}$, and moments M_x, M_y, M_z indicate the maximum permissible values of the load (see Pg.7). Higher loads will have a detrimental effect on the running quality. A safety factor, S_0, is used to check the static load, which takes into account the basic parameters of the application and is defined more in detail in the following table:

Safety factor S_0	
No shock or vibration, smooth and low-frequency reverse, high assembly accuracy, no elastic deformations	1.0 - 1.5
Normal installation conditions	1.5 - 2.0
Shock and vibration, high-frequency reverse, significant elastic deformation	2.0 - 3.5

The ratio of the actual load to maximum permissible load may be as large as the reciprocal of the accepted safety factor, S_0, at most.

$$\frac{P_{0rad}}{C_{0rad}} \leq \frac{1}{S_0} \qquad \frac{P_{0\mathrm{ax}}}{C_{0\mathrm{ax}}} \leq \frac{1}{S_0} \qquad \frac{M_1}{M_\mathrm{x}} \leq \frac{1}{S_0} \qquad \frac{M_2}{M_\mathrm{y}} \leq \frac{1}{S_0} \qquad \frac{M_3}{M_z} \leq \frac{1}{S_0}$$

The above formulas are valid for a single load case. If two or more forces are acting simultaneously, please check the following formula:

$$\frac{P_{0rad}}{C_{0rad}} + \frac{P_{0ax}}{C_{0ax}} + \frac{M_1}{M_x} + \frac{M_2}{M_y} + \frac{M_3}{M_z} + y \leq \frac{1}{S_0}$$

$P_{0\mathrm{rad}}$	Applied radial load [N]
$C_{0\mathrm{rad}}$	Radial load capacity [N]
$P_{0\mathrm{ax}}$	Applied axial load [N]
$C_{0\mathrm{ax}}$	Axial load capacity [N]
M_1, M_2, M_3	Applied moments [Nm]
M_x, M_y, M_z	Moment capacity in the different loading directions [Nm]
y	Reduction due to preload [N]

The safety factor S_0 may be at the lower given limit if the occurring forces can be determined with sufficient precision. If shock and vibration are present, the higher value should be selected. For dynamic applications higher safety is required. Contact Rollon technical support for guidance.

▪ Slider load - Examples of formulas used to determine the forces on the most heavily loaded slider

For an explanation of the parameters in the formulas see Pg.14.

- Horizontal movement - slider load

$$P_1 = F \cdot \frac{b}{a+b} \qquad P_2 = F - P_1$$

In addition each slider is loaded by a moment: $M_1 = \frac{F}{2} \cdot c$

Static test

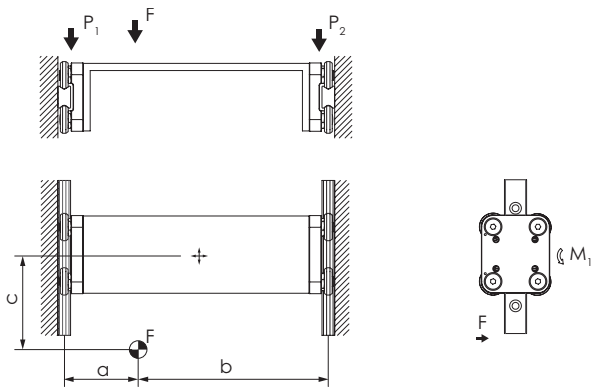

Fig.11

- Horizontal movement - slider load

$$P_{1a} \cong P_{2a} = \frac{F}{2} \qquad P_{2b} \cong P_{1b} = F \cdot \frac{a}{b}$$

Static test

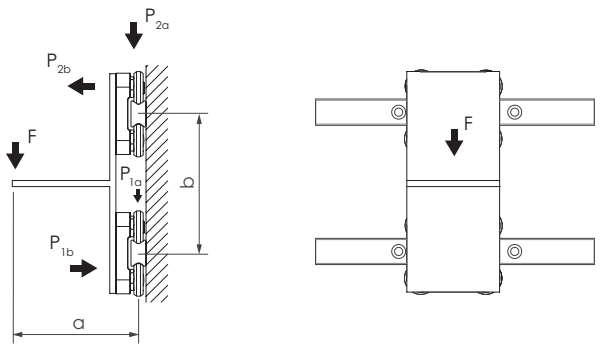

Fig.12

- Horizontal movement - slider load

$$P_2 = F \cdot \frac{a}{b} \qquad P_1 = P_2 + F$$

Note: Applies only if the distance between the centers of the sliders, b, is greater than 2 times the slider length.

Static test

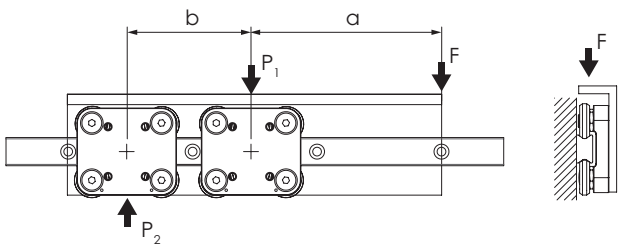

Fig.13

- Horizontal movement - slider load

$$P_1 = \frac{F}{4} - \left(\frac{F}{2} \cdot \frac{b}{c}\right) - \left(\frac{F}{2} \cdot \frac{a}{d}\right) \qquad P_2 = \frac{F}{4} - \left(\frac{F}{2} \cdot \frac{b}{c}\right) + \left(\frac{F}{2} \cdot \frac{a}{d}\right)$$

$$P_3 = \frac{F}{4} + \left(\frac{F}{2} \cdot \frac{b}{c}\right) - \left(\frac{F}{2} \cdot \frac{a}{d}\right) \qquad P_4 = \frac{F}{4} + \left(\frac{F}{2} \cdot \frac{b}{c}\right) + \left(\frac{F}{2} \cdot \frac{a}{d}\right)$$

Note: Slider no. 4 is defined as the one located closest to the point where the force is applied.

Static test

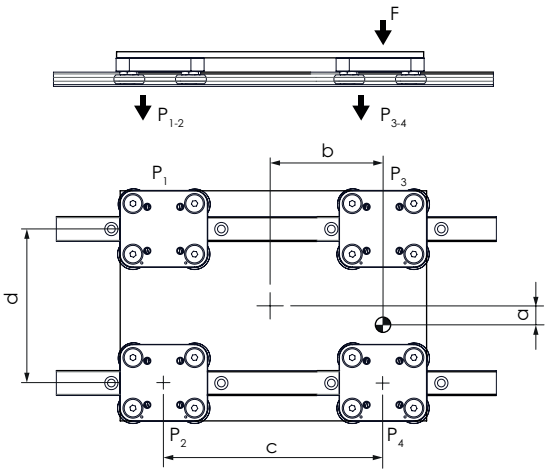

Fig.14

- Vertical movement - slider load

$$P_1 \cong P_2 = F \cdot \frac{a}{b}$$

Static test

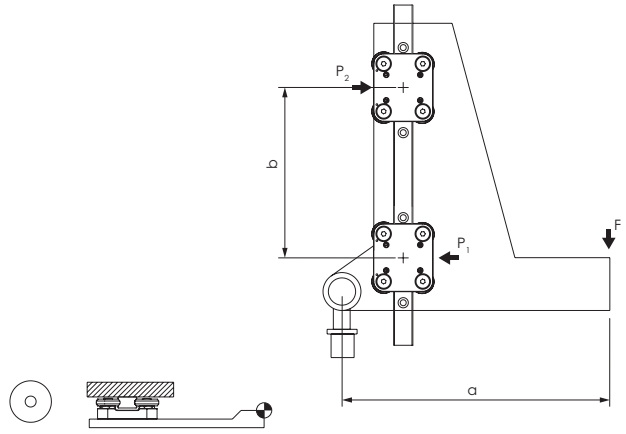

Fig.15

- Horizontal movement - slider load

Test with a moving element of the weight-force F_g at the instant the direction of movement changes.

Initial force

$$F = m \cdot a$$

Slider load at time of reverse

$$P_1 = \frac{F \cdot I}{d} + \frac{F_g}{2} \qquad P_2 = \frac{F_g}{2} - \frac{F \cdot I}{d}$$

Glossary

F	Applied force [N]
F_g	Weight-force [N]
P_1, P_2, P_3, P_4	Effective load on the slider [N]
M_1, M_2	Effective moment on the slider [Nm]
m	Mass [kg]
a	Acceleration [m/s²]
y	Reduction due to preload [N] (see Tab.7)

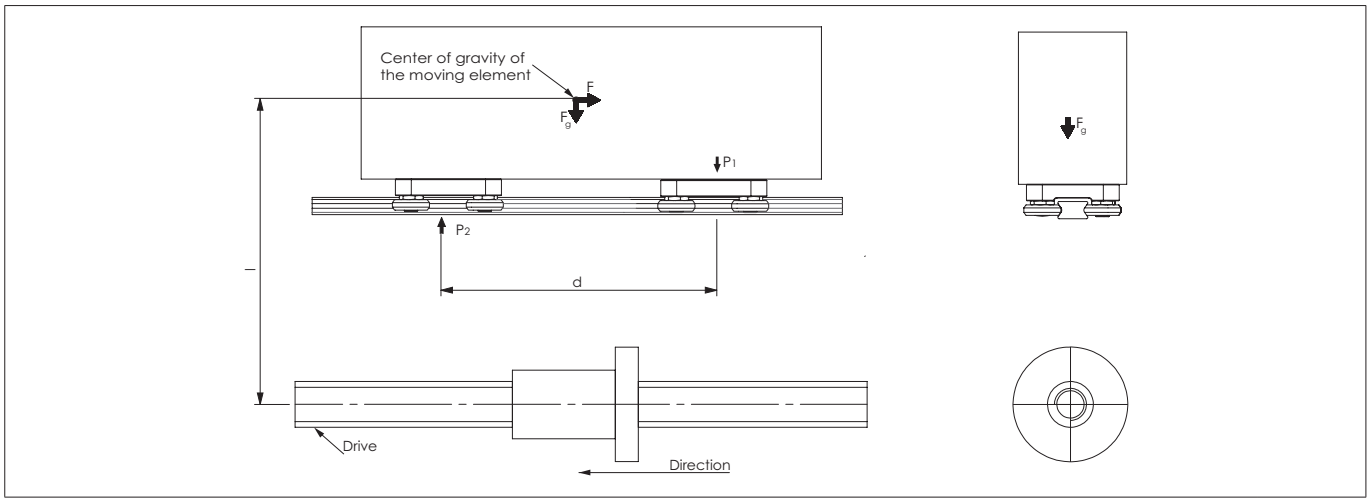

Fig.16

▪ Calculation of the service life

The dynamic load rating C is a conventional quantity used for calculating the service life. This load corresponds to a nominal service life of 100 km. The calculated service life, dynamic load rating, and equivalent load are linked by the following formula:

$$L_{km} = 100 \cdot \left(\frac{C}{P} \cdot \frac{f_c}{f_i} \cdot f_h \right)^3$$

L_{km}	Theoretical service life [km]
C	Dynamic load capacity [N]
P	Effective equivalent load [N]
f_c	Contact factor
f_i	Application coefficient
f_h	Stroke factor

The effective equivalent load P is the sum of the forces and moments acting simultaneously on a slider. If these different load components are known, P is obtained from the following equation:

$$P = P_{0rad} + \left(\frac{P_{0ax}}{C_{0ax}} + \frac{M_1}{M_x} + \frac{M_2}{M_y} + \frac{M_3}{M_z} + y \right) \cdot C_{0rad}$$

y = reduction due to preload (see pg.8, Tab.5)

Here the external loads are assumed as constant in time. Brief loads, which do not exceed the maximum load capacities, do not have any relevant effect on the service life and can therefore be neglected.

The contact factor fc refers to applications in which several sliders pass the same rail section. If two or more sliders move over the same point of a rail, the contact factor according to the table below must be taken into account in the formula for calculation of the service life.

Numbers of sliders	1	2	3	4
f_c	1	0.8	0.7	0.63

▪ Calculation formulas

The application coefficient f_i takes into account the operational conditions in the service life calculation. It has a similar significance to the safety factor S_0 in the static load test. It is calculated as described in the following table:

f_i	
No shocks or vibrations, smooth and low-frequency changes in direction; clean operating conditions; low speeds (<1 m/s)	1.0 - 1.5
Slight vibrations; medium speeds; (1-2.5 m/s) and medium frequency of the changes in direction	1.5 - 2.0
Shocks and vibrations; high speeds (>2.5 m/s) and high-frequency changes in direction; extreme contamination	2.0 - 3.5

The stroke factor f_h takes into account the higher load of the raceways and rollers during short strokes on the same total length of run. The corresponding values are taken from the following graph (for strokes longer than 1 m, f_h =1):

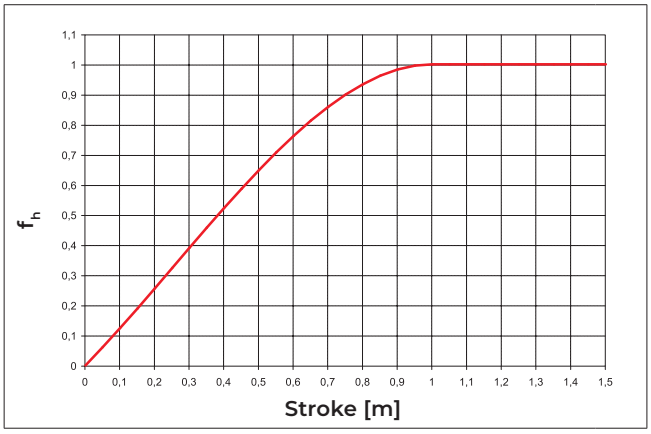

Fig.17

beyond motion

The content of this document and its use are subject to the general terms of sale of ROLLON available on the web site www.rollon.com